Service Instruction

Two-Column Rotary Disconnector Type SGF 72,5 - 145

Optimally with Built-on Earthing Switch Type TEC

Publication No	Rated Voltages	72,5 - 145	kV
1HPL 500 626 i En	Rated Currents	1600 - 4000	A

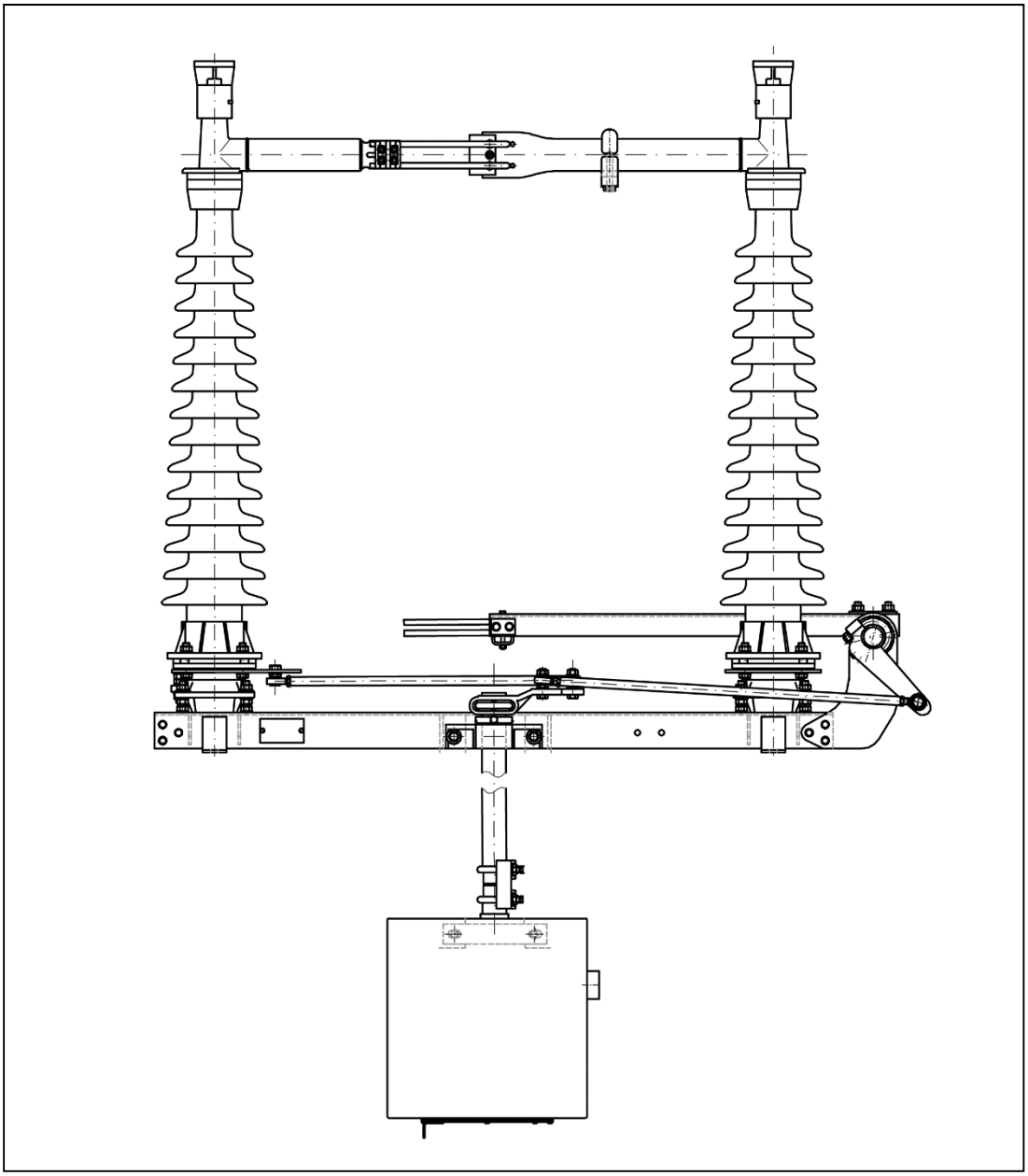

HAPAM

Contents

1. Please Read First ... 3

2. Function ... 3

3. Technical Data ... 4

4. Design and mode of operation ... 7

4.1 Disconnector (main blades) ... 7

4.2 Earthing switch ... 7

4.3 Operating mechanisms ... 8

4.4 Auxiliary switches ... 8

4.5 Interlocking ... 8

5. Shipping and storage ... 8

5.1 Scope of supply - disconnector ... 8

5.1 Scope of supply - earthing switch ... 9

6. Mounting ... 9

6.1 Rating plates ... 9

6.2 Mounting of disconnector ... 10

6.3 Mounting of Operating Mechanism for Disconnector ... 14

6.4 Mounting of Coupling of Disconnectors, Cabling ... 19

7. Mounting of Earthing Switch type TEC ... 25

7.1 Mounting of Operating Mechanism for Earthing Switch ... 25

7.2 Mounting of Earthing Switch ... 27

8. Mounting of Mechanical Interlocking ... 39

9. Mounting of mechanical interlocking in end positions ... 41

10. Commissioning and De-commissioning ... 42

10.1 Commissioning of Disconnector ... 42

10.2 Commissioning of Earthing Switch ... 42

10.3 Commissioning of Operating Mechanism for Disconnector ... 42

10.4 Commissioning of Operating Mechanism for Earthing Switch ... 42

10.5 De-commissioning ... 43

11. Maintenance ... 44

11.1 Treatment of contact surfaces and Intersection Surfaces ... 45

11.2 Maintenance - Disconnector ... 46

11.3 Earthing Switch ... 46

12. Spare parts ... 50

13. Lists of Item Numbers ... 51

14. List of figures ... 53

1. Please Read First

These service instructions have been carefully written and are intended to enable the safe and reliable operation of our products. However, if you find any discrepancies in these service instructions or you think they require some amendments or changes, please let us know. At the end of these service instructions you will find a form you can use for this purpose.

The instruction the standard solutions. During installation also use the dimensional drawings provided with the specific delivery.

We accept no responsibility whatsoever regarding any direct or indirect damage or loss arising through the incorrect use of our products. Subject to change without notice.

We reserve all rights in respect of this document and the product represented therein. The contents of this document may not without our positive consent be reproduced, notified to third parties or otherwise used.

© HAPAM Poland Sp. z o.o.

2. Function

High-voltage disconnectors are used for the electrical isolation of electrical high-voltage networks. When opened, they form visible isolation distance. High voltage disconnectors are switched under no-load conditions. So only small capacitive or inductive currents, which occur during discharge of disconnected overhead-line or cable sections are controlled. The type SGF two-column rotary disconnector described in these service instructions is a single-pole disconnector for outdoor installation. Two or three poles can be coupled to from a group.

The type SGF two-column rotary disconnector conforms to the following standards:

- IEC 62 271-102; 2003
- IEC 62 271-1; 2007

In order to earth two-column and short-circuit switched off parts of plant, it is possible to mount one or two earthing switches per pole.

The type SGF two-column rotary disconnector is available in wide range of variants. These service instructions are valid for standard variants. In case of special solutions use additional documentation (dimension drawings made especially for the project

3. Technical Data

3.1 General Electrical Data

Disconnector		**SGF 72,5**	**SGF 123**	**SGF 145**
Rated voltage	KV	72,5	123	145
Rated normal current type n type p type pc type q	 A A A A	 1600 2500 3150 4000	 1600 2500 3150 4000	 1600 2500 3150 4000
Rated peak-withstand current	kA	100 / 125	100 / 125	100 / 125
Rated short-time current (1sec)	kA	40 / 50	40 / 50	40 / 50
Rated power frequency voltage (50 Hz, 1min r.m.s) against earth and between poles over isolating distance	 kV kV	 140 160	 230 265	 275 315
Rated lighting-impulse-withstand voltage 1,2/50µs against earth and between poles over isolating distance	 kV kV	 325 375	 550 650	 650 750
Partial-discharge voltage	kV	> 46	> 80	> 95
Radio-interference voltage 1,1Un/√3	µV	-	< 2500 (at 78 kV)	< 2500 (at 92 kV)
3-phese switching capacity inductive, capacitive	A	2	2	2

Minimum failing load of insulator	kN	4,0 - 6,0	4,0 - 6,0 - 8,0	4,0 - 6,0 - 8,0
Permissible mechanical terminal load static and dynamic static portion	 kN kN	 3,5 - 4,5 1,5 - 2,5	 3,0 - 4,5 - 6,0 1,5 - 2,5 - 3,0	 3,1 - 4,7 - 6,0 1,5 - 2,5 - 2,5

3.2 General Main Dimensions

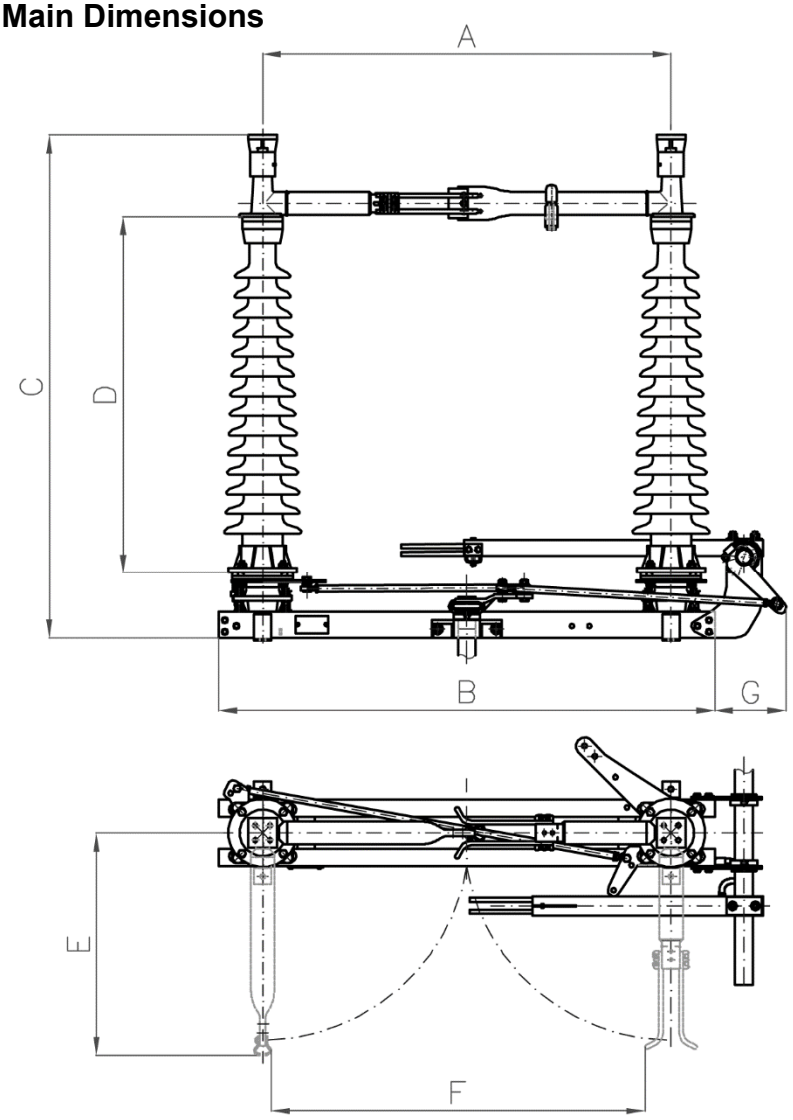

Figure 1 General main dimensions of type SGF two column rotary disconnector

Rated voltage	kV	**72,5**	**123**	**145**
A Support-insulator distance	mm	1000	1400	1650
B Base-frame length	mm	1300	1700	1950
C Disconnector height type n type p type pc type q	 mm mm mm mm	 1285 1335 1305 1305	 1735 1785 1755 1755	 2015 2065 2035 2035
D Insulator height	mm	770	1220	1500
E Disconnector width (open)	mm	560	760	925
F Isolating distance	mm	800	1200	1450
G Length of mounting of earthing switch	mm	450	450	450

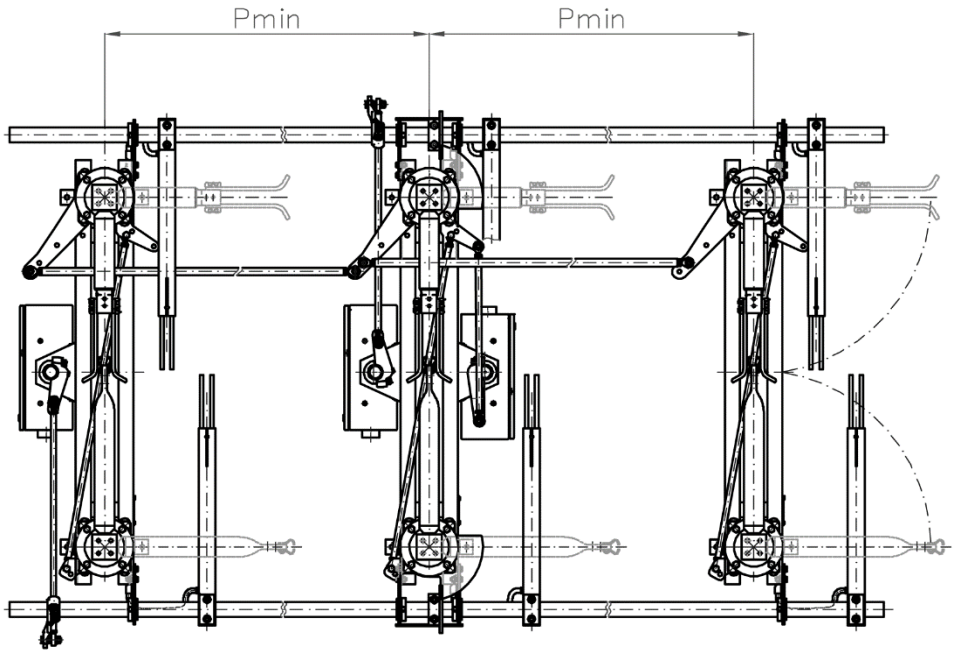

a) Parallel arrangement

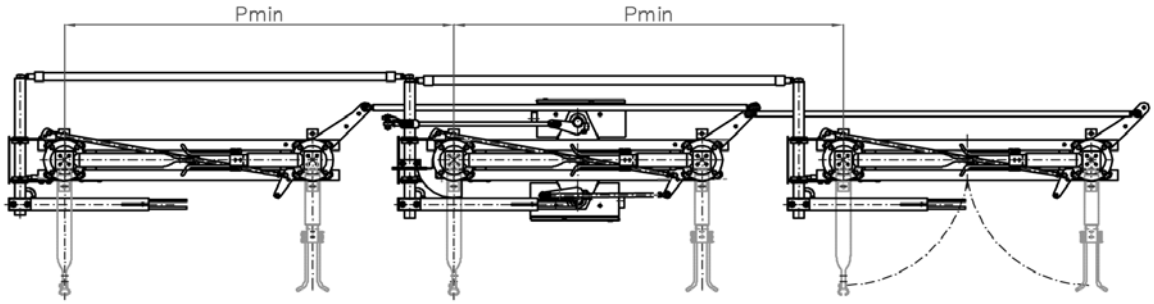

b) Series arrangement

Figure 2 Minimum distance P_{min} between poles of disconnector

Rated voltage	kV	**72,5**	**123**	**145**
Parallel arrangement	mm	1270	1970	2330
Series arrangement	mm	1790	2700	3150

4. Design and mode of operation

4.1 Disconnector (main blades)

The operating mechanism (75) of the disconnector transfers the operating energy vie the operating rod (37) to the rotary pedestal. The diagonal rod (68) connects the two rotary pedestals of each pole. Consequently, both pole halves are moved simultaneously. The support insulators (201) transfer the torque to the two current-path halves (5, contact side) and (6, finger side). These pass through an angle of rotation 90° during switching. During switching-on, the contact piece (67) glides between the contact fingers (66). This establishes the connection between the two current-path halves. The current is transferred via tulip-type contacts in rotary heads (284) to the high-voltage terminals (17).

The contact fingers (66) and contact pieces (67) can be delivered in two versions of coating:
- silver placed (Ag)
- silver-carbon placed (AgC) –lubrication free version (greasing of contacts is not necessary)

Via the coupling rods (15), the movement of the operated pole is transferred simultaneously to the other poles of a disconnector group.

4.2 Earthing switch

The operating mechanism (77) of the earthing switch transfers the operating energy via the operating rod (71) to the earthing-switch shaft (337). The tubular contact arm (23) swivels up (ON) or down (OFF). During switching-on, the contact fingers (20) glide over the earthing switch contact (18). In the ON position, they are in preloaded contact against the stop.

The earthing connection (79) connects the tubular contact arm (23) to the earthed sectional-steel base frame (221) of the disconnector.

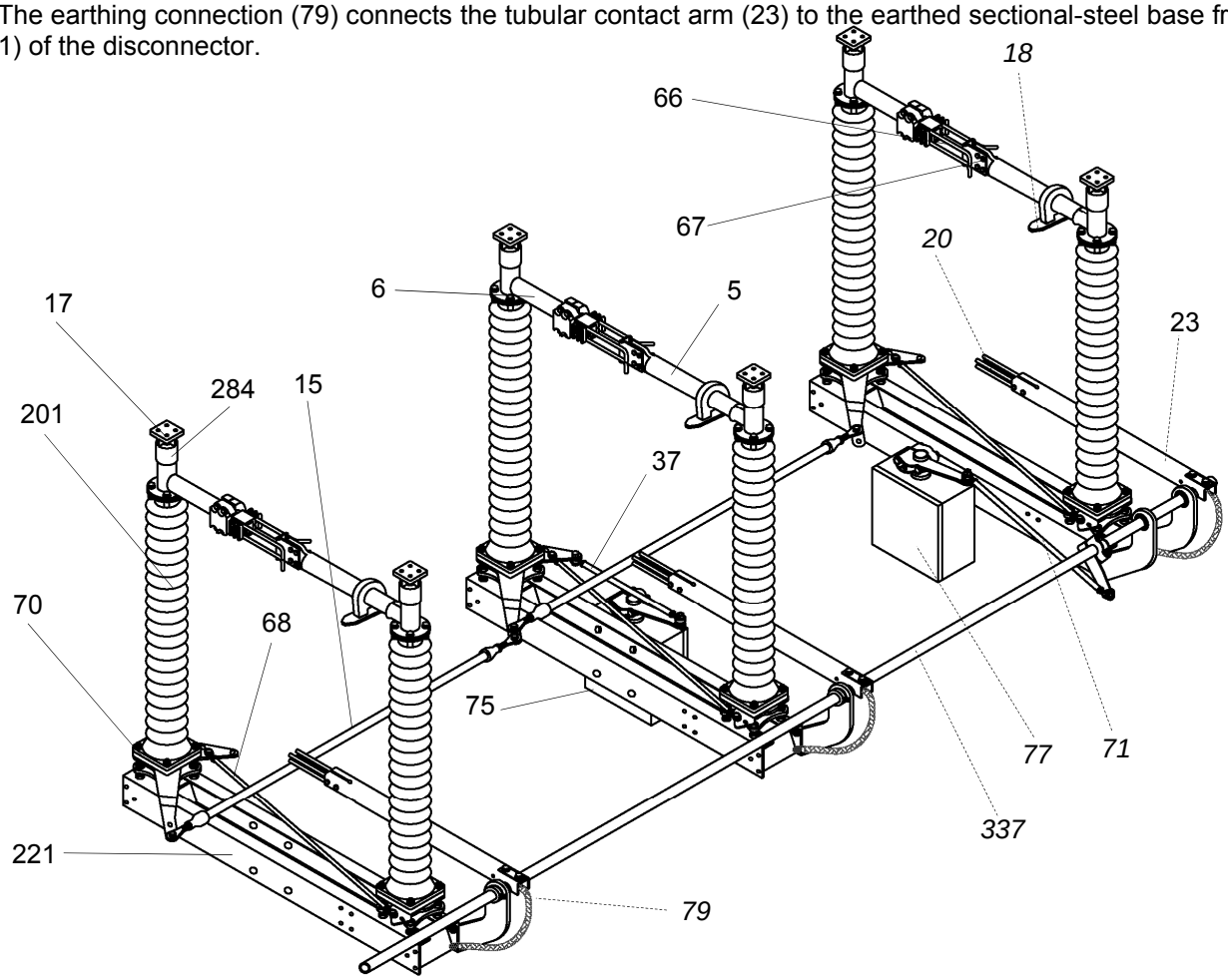

Figure 3 Disconnector type SGF with build on earthing switch type TEC
(3-pole in parallel arrangement)

4.3 Operating mechanisms

Disconnectors can be equipped with motor of hand operating mechanisms according to client requirements. Three pole disconnector needs only one operating mechanism. Coupling piece of mechanism is connected with disconnector with operating shaft (43).

4.4 Auxiliary switches

Auxiliary switches are installed inside operating mechanism. They are actuated by control disc fitted to the operating shaft of mechanism. Position signal is given after closing when the dead centre is overrun (i.e. after closing of the current path of the disconnector). The signal for the opening position is given analogously.

4.5 Interlocking

The disconnector and the earthing switch can be interlocked according to following principle:

- Disconnector only ON when earthing switch OFF
- Earthing switch only ON when disconnector OFF

Interlocking is mechanical and/or electrical, depending on the version.

Mechanical interlock, between disconnector and earthing switch are fitted at the factory. Later changes are possible by co-operation with HAPAM erection specialists

5. Shipping and storage

The equipment is shipped on pallets or in boxes (for far distances from Poland). Disconnectors are preliminary mounted in individual sub-assemblies.

The scope of supply does not include fixing materials for mounting the disconnector on the supporting structures.

After unpacking, check all supplied equipment immediately for shipping damage. Report shipping damage without delay to the forwarding agency

5.1 Scope of supply - disconnector

The components supplied comprise (Fig. 2):

- Disconnector base(2) consisting of: Sectional-steel base frame (221), rotary pedestals (70), diagonal rod (68), disconnector operating lever (69), connecting lever (3), transportation angle (327), positioning angle (328)
- Support insulators (201)
- Current-path half, contact side (6)
- Current-path half, finger side (5)
- Operating rod (37)
- Operating lever (74) with clamping cover (334)
- Coupling rods (15)
- If operating mechanism mounted separately: Vertical operating shaft (43)and pivot bearing (42)
- If operating mechanism with lateral offset: Operating rod (83)
- Small parts

5.1 Scope of supply - earthing switch

The supply of the earthing switch comprises (Fig. 2):

- Earthing-switch links (336)
- Tubular contact arms(23) with contact finger (20)
- Earthing contact (18)
- Operating mechanism for earthing switch (77)
- Operating rod (71)
- Operating lever (76) with clamping cover (334)
- Earthing connections (79)
- For 2-nd earthing switch: Earthing connections (343)
- Earthing-switch shaft (337)
- In case of series arrangement: Earthing-switch shafts (73) with welded earthing-switch lever (339)
- Earthing-switch lever (19)
- In case of series arrangement: Coupling rods (15)
- If operating mechanism mounted separately: Vertical operating shaft (43) and pivot bearing (42)
- If operating mechanism with lateral offset: Operating rod (83) and offset bearing (376)
- Small parts

In case of inappropriate storage of the individual components, there is the risk of ingress of water. For this reason, disconnector parts and operating mechanisms must always be stored in mounting position.

It is advisable to leave all assemblies in shipping packing until the start of mounting in order to protect against contamination and damage.

Operating mechanisms are supplied in special packing. This protects the operating mechanisms against corrosion within a limited time and in a dry atmosphere. It is advisable not to open this packing until just before the start of mounting.

In case of lengthy storage and/or a damp atmosphere, there may be undesired formation of condensation in the operating mechanisms. If the shipping time and storage time together amount to more than 6 months or if operating mechanisms are stored in a damp atmosphere, the special packing must be removed immediately and the electrical heating of the operating mechanisms must be started. Before doing this, remove bags with desiccative from the operating mechanisms!

6. Mounting

6.1 Rating plates

Rating plates of disconnector and earthing switch:
Serial number:

xxx xxxx xxxx	serial number (project number, production order number)
yy	group number (01 to 99)
z	pole designation (for 3-pole group: a, b, c)

Example: serial number: **50 3654 1 07030 04 c**

- pole **c**
- from group No. **04**,
- production order **07030**.
- project number **50 3654**

Designation of disconnector: **SGF 123 p100 +2E**

- number of earthing switch per pole
- rated peak-withstand current in kA
- rated continues current
- rated voltage in kV
- disconnector type SGF

6.2 Mounting of disconnector

The disconnector pole can be mounted earlier on supporting structure or in front of supporting structure. If mounting in front of the supporting structure, first lift the completely mounted disconnector pole onto the supporting structure and than align and tighten it there (Fig. 5)

Remember that the materials for fixing the disconnector bases (221) on the supporting structure are not included in scope of supply.

The transportation angles (328) (Fig. 7) must be mounted in place and may under no circumstances be removed during this mounting phase

The diagonal rods (68) (Fig. 4) have been adjusted at the factory for the precise engagement of the main contacts. HAPAM-trained specialist may only change the adjustment.

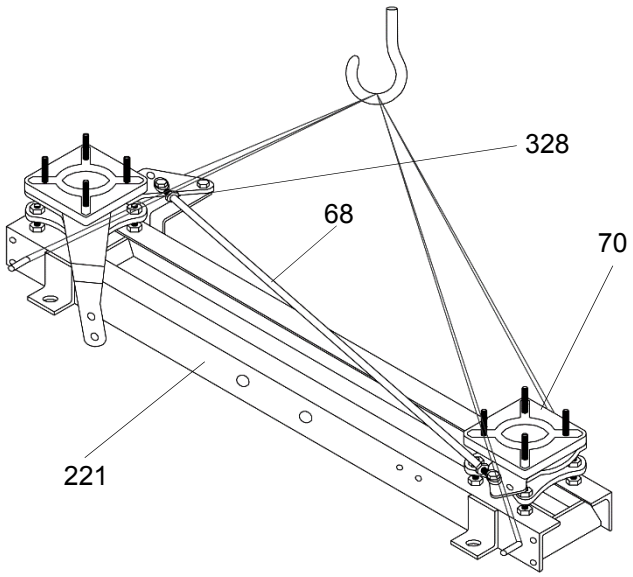

Figure 4 Shipping of disconnector base if mounting on support structure

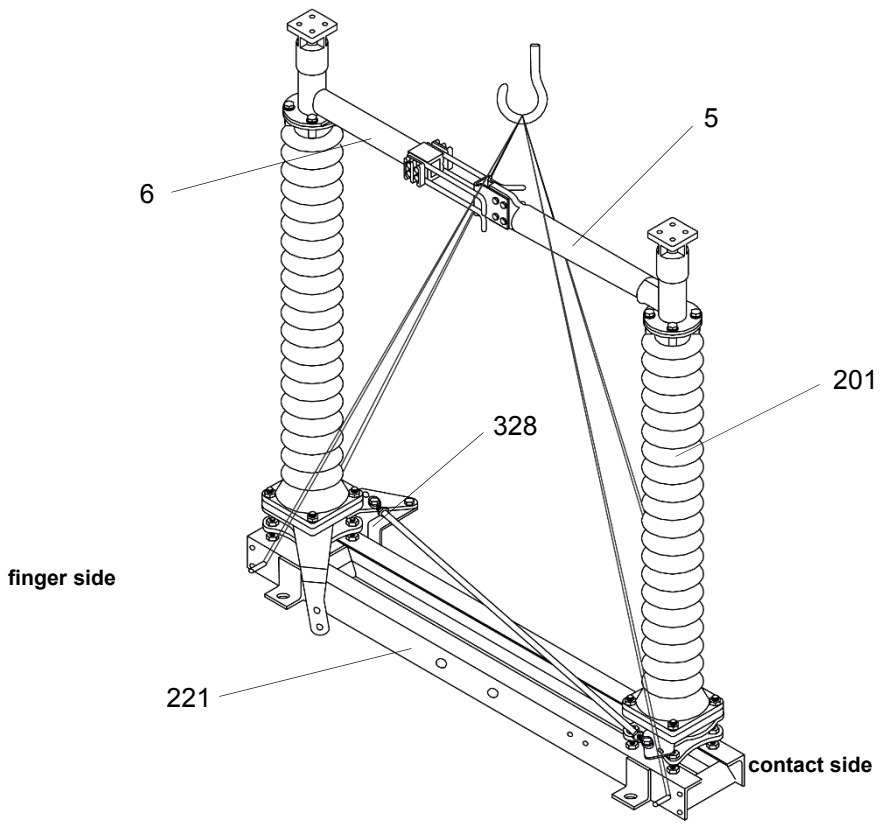

Figure 5 Shipping of premounted disconnector pole if mounting in front of supporting structure

Mounting steps:

1. Unpack components.
2. Using lifting tackle, place disconnector base (221) on the supporting structure.
2. Align and tighten disconnector base on supporting structure.
3. Mount support insulators (201) on the rotary pedestals (70).
4. Wipe contact finger (66) and contact pieces (with a cloth) and grease.
   (if disconnector is equipped with AgC lubrication-free contact greasing is not necessary)
5. Mount finger-side current path (5) with contact piece (67) into the contact, fingers (66) and mount on support insulator (201).
6. Slide contact-side current path (5) with contact piece (67) into contact fingers (66) and mount on support insulator (201).
7. Align current paths (5, 6) longitudinally parallel with sectional-steel base frame (221) (use play in holes in flanges).

If disconnector is delivered as premounting complete of pole:

Current paths are blocked in half-open position (Fig. 7). Before placing the disconnector on supporting structure, the transport angle (327) have to be removed without changing position of the positioning angle (328). Then close disconnector pole and screw the positioning angle (328) to the base frame (Fig. 7)

Lift pole of disconnector, place on supporting structure, adjust its position and tighten the screws.

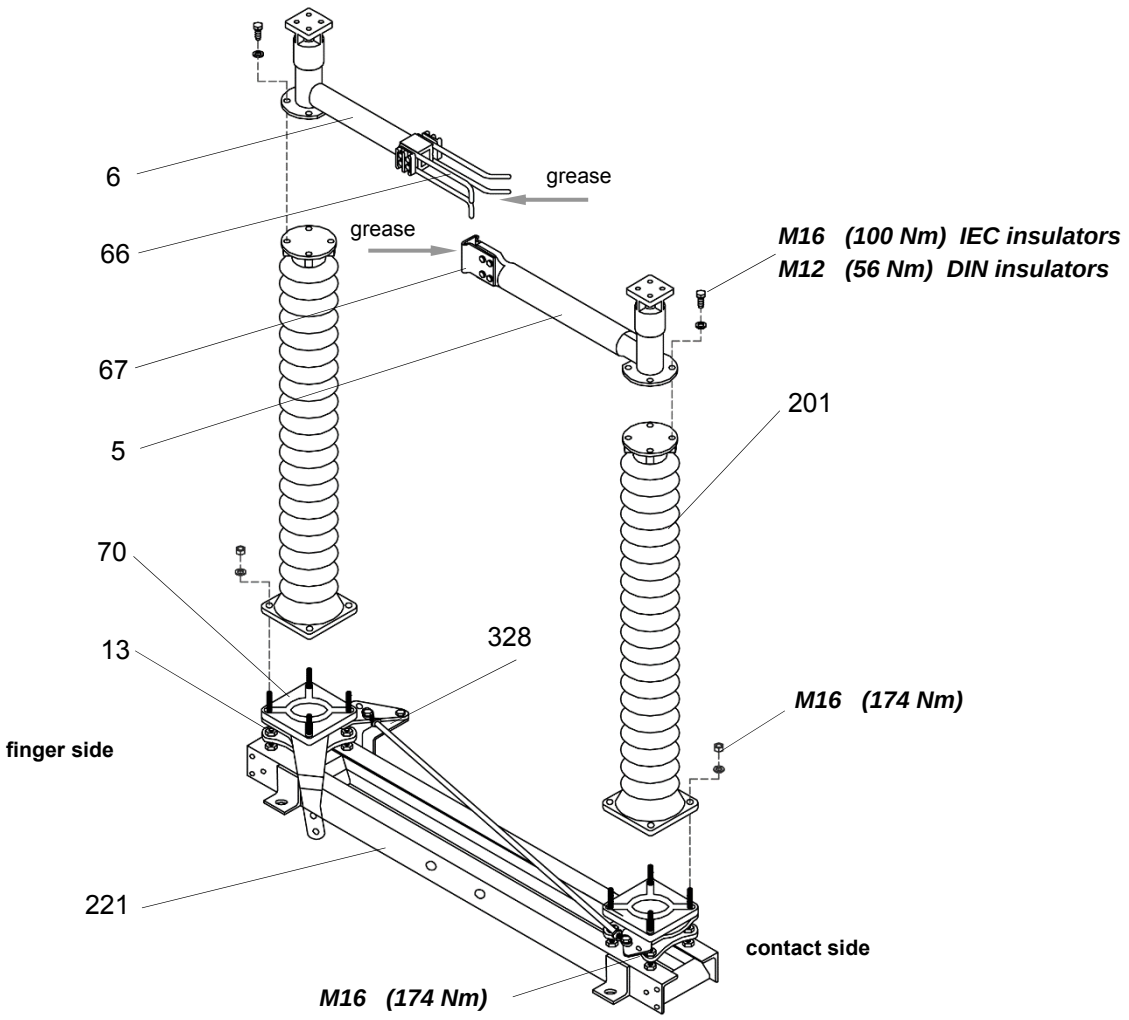

A) insulators with pitch diameter 200; 225mm

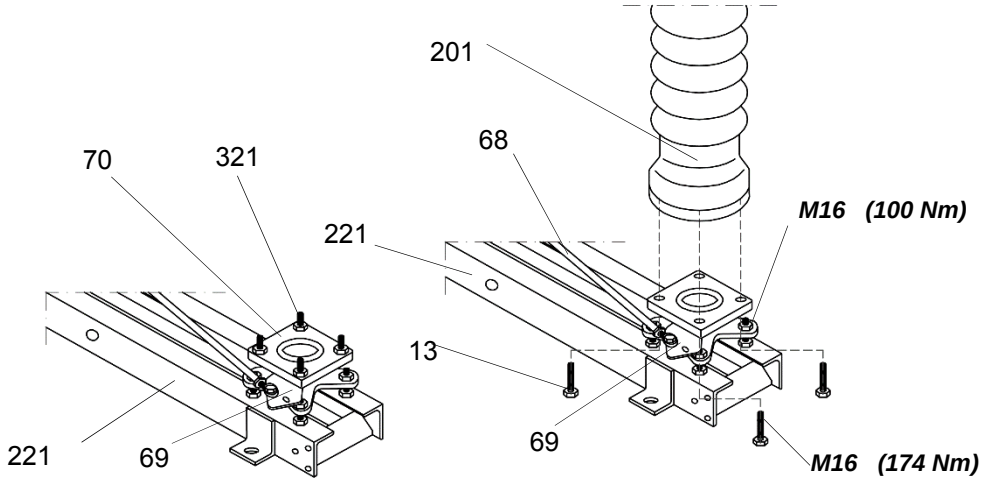

B) insulators with bottom pitch diameter 127mm

Figure 6 Mounting of insulators and current paths

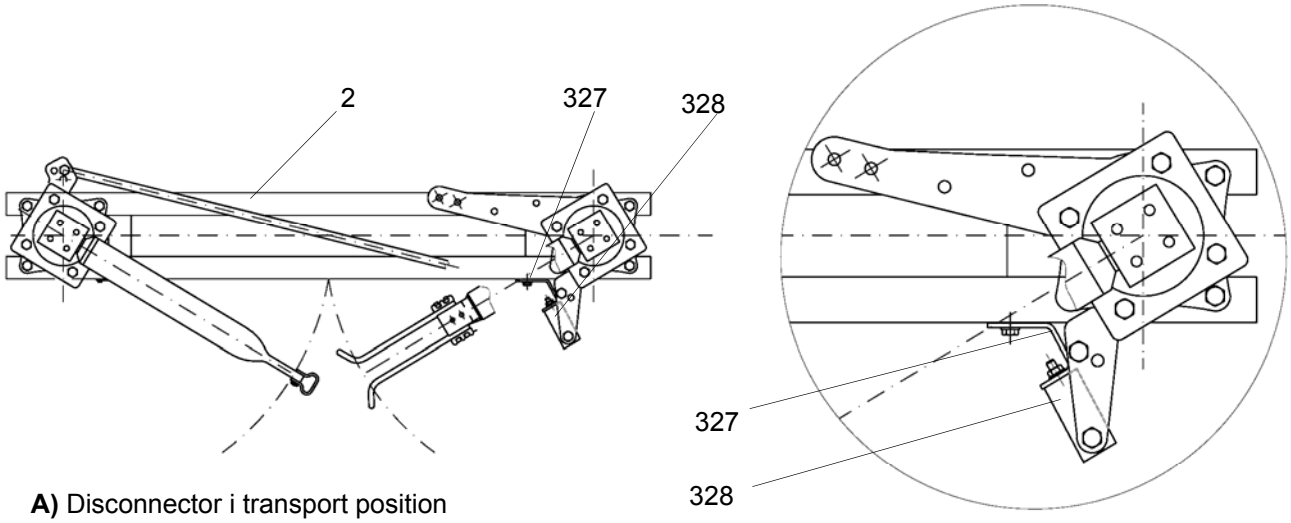

A) Disconnector i transport position
- transport angle (327)
- positioning angle (328)

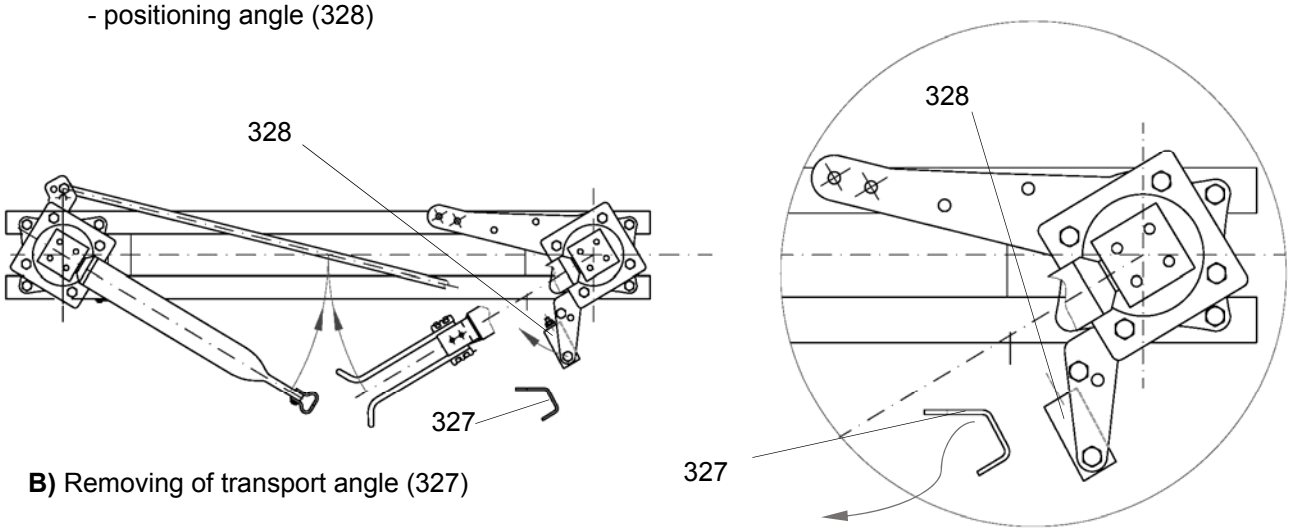

B) Removing of transport angle (327)

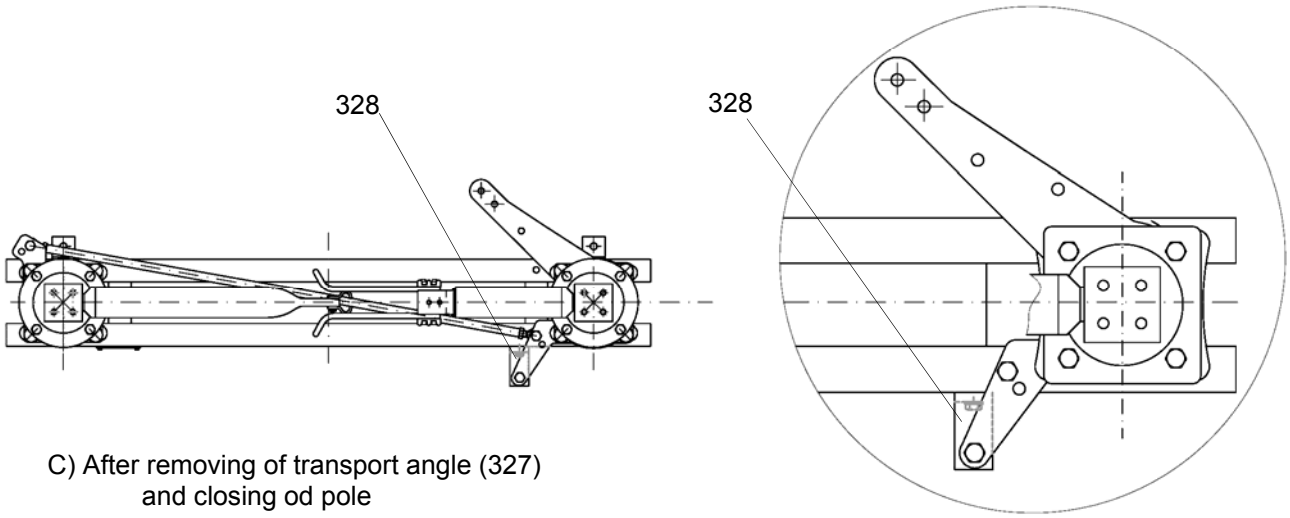

C) After removing of transport angle (327)
and closing od pole

Figure 7 Preparing the disconnector pole for mounting

6.3 Mounting of Operating Mechanism for Disconnector

Make sure that the operating mechanism is in ON position (as delivered state) the operating mechanism is in the OFF position, set it to ON position using the emergency hand crank (39).

In case of motor-operated mechanism, test operation may only be carried out using the emergency hand crank (39). Do not use a drill.

6.3.1 Direct mounting on base frame

1. Unpack operating mechanism (75)
2. Tighten operating mechanism, on the envisaged mounting side, to the disconnector base (2)
3. Mount operating lever (74) on the shaft and operating mechanism according to the mounting side

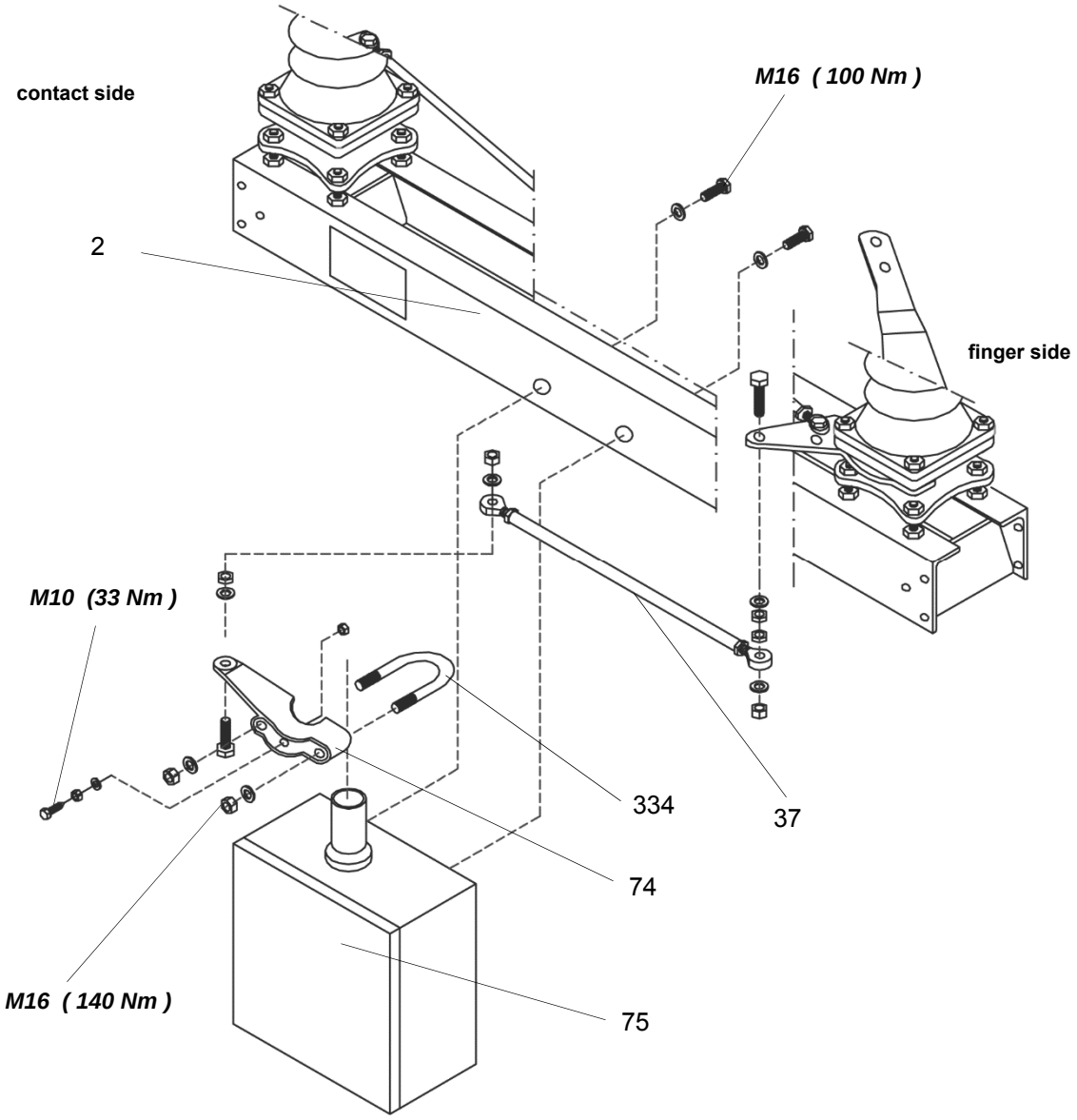

Figure 8 Mounting operating mechanism for disconnector direct mounting

6.3.2 Separate mounting

In case of separate mounting of operating mechanism for disconnector, the mounting steps are depended on measurement “m3” of operating shaft (43) and on a possible lateral offset of operating of mechanism and disconnector

- Separate mounting if measurement m3 < 6 m (Fig. 10A)
- Separate mounting if measurement m3 = 6…12 m (Fig. 10B)

Separate mounting laterally offset with measurement m1 (max. 4m)

Mounting steps:

1. Unpack operating mechanism (75)
2. Mount pivot bearing (42) on the disconnector base (2) (Fig. 9)
3. If measurement m3 = 6…12 m: Mount additional pivot bearings in the envisaged positions
4. Insert operating shaft (43) through the pivot bearing
5. If measurement m3 = 6…12 m: Insert individual parts of the operating shaft (43) through the pivot bearings
6. Vertically align operating mechanism by operating shaft (43) and mount
7. Calculate required length of operating shaft and mount (Fig. 10)
8. Remove operating shaft again and shorten
9. After shortening, coat intersection surface with the zinc paint
10. Grease thrust bearing (330), inside, and collared bush (331), outside, with silicone grease
11. Repeat mounting steps 6. and 7. threading thrust bearing (330) and collared bush (331) in the correct sequence onto the operating shaft
12. If measurement m3 = 6…12 m: Connect individual parts of operating shaft to coupling parts (334, 335)
13. Tighten operating mechanism and all pivot bearings
14. Connect shaft end of operating mechanism and operating shaft to coupling parts (334, 335)
15. Mount the operating lever (74) on the upper end of operating shaft (43)

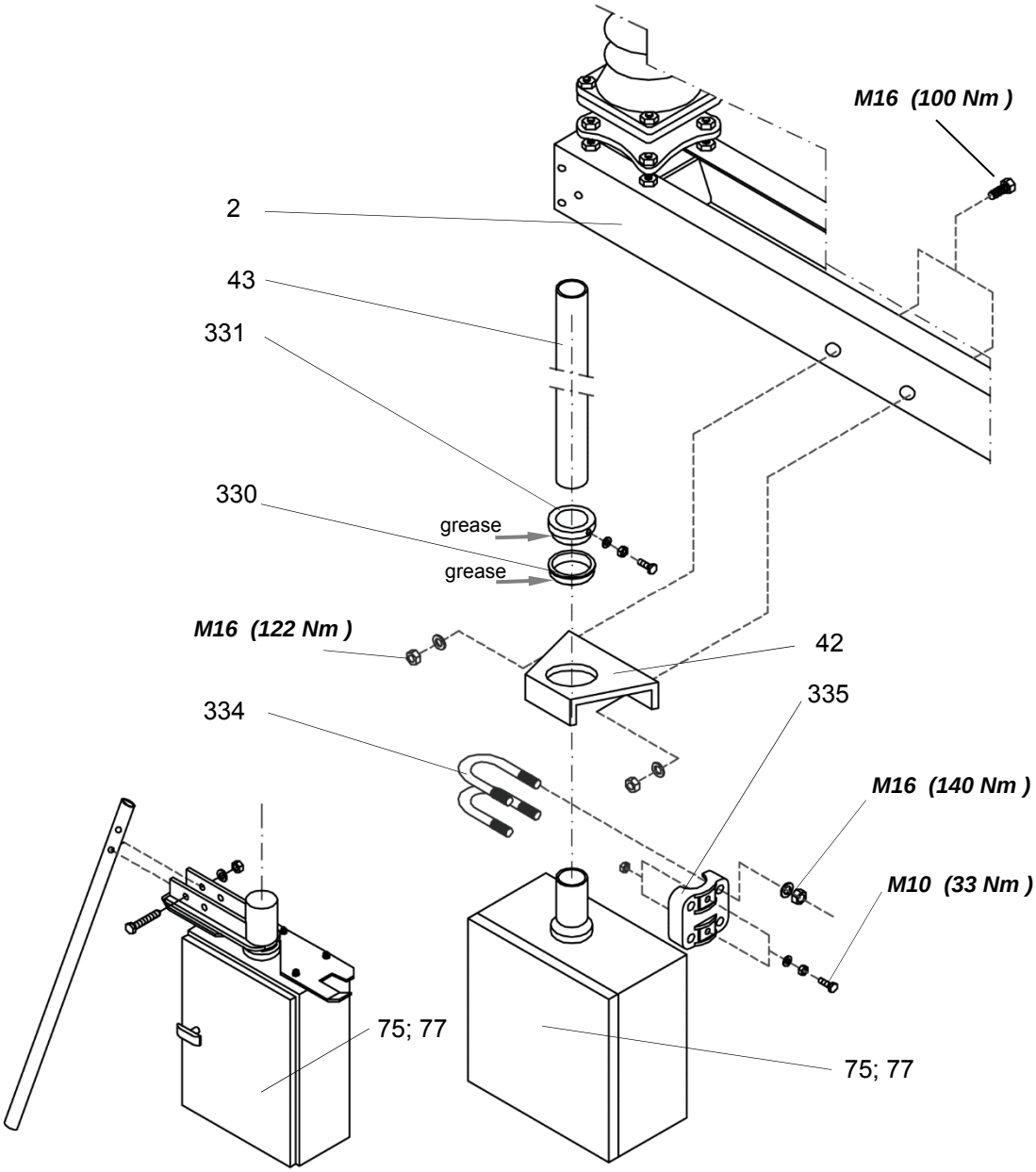

Figure 9 Mounting operating mechanism for disconnector, separate mounting: Measurement m3 < 6m

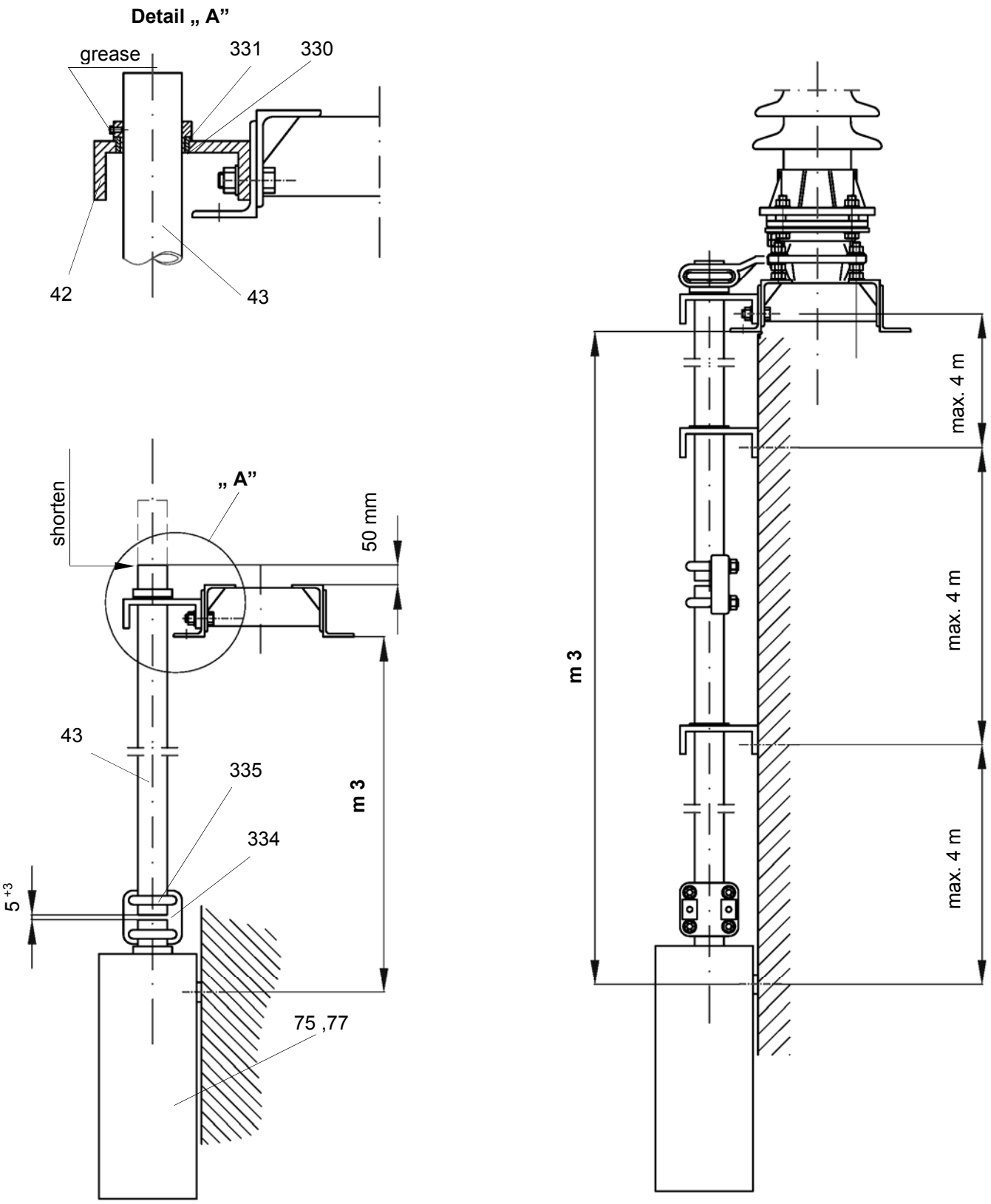

A) m3 ≤ 6 m **B)** m3 = 6...12 m

Figure 10 Mounting operating mechanism for disconnector, separate: Measurement m3

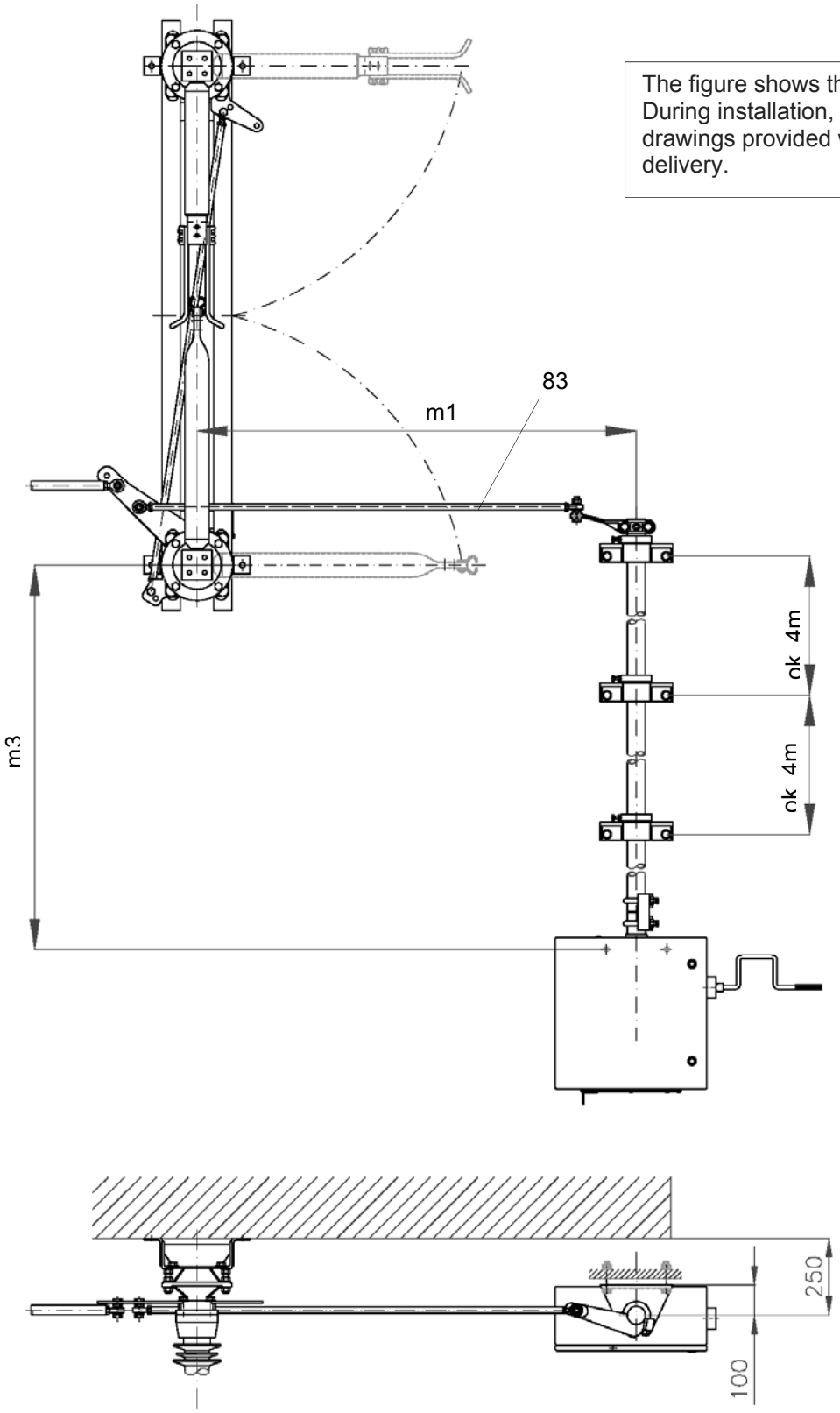

The figure shows the standard solution. During installation, use the dimensional drawings provided with the specific delivery.

Figure 11 Mounting operating mechanism for disconnector, wall mounting

6.4 Mounting of Coupling of Disconnectors, Cabling

Make sure that disconnector poles are in the ON position before coupling and that the positioning angles (328) are still mounted.

Mounting steps

1. Adjust coupling rods (15) (Fig. 12, Fig. 13) to the required length
2. Mount coupling rods free from distortion (Fig. 12, Fig. 13)
3. Tighten lock nuts (338) (left-, right-hand thread) (Fig. 12, Fig. 13)
4. Remove positioning angle (328) from disconnector pole with operating mechanism (Fig. 7)
5. Set operating mechanism (75) manually to the ON position
6. Adjust operating lever (74) to measurements “R” and “X” (Fig. 14)
7. Mount operating rod (37) (Fig. 13), and set to the required length (measurement “n2”)
8. Tighten operating rod (37) free from distortion with the lock nuts and tighten lock nuts (338) (Fig. 14)
9. Tighten operating lever (74)
10. Remove positioning angles (338) from the other disconnector poles
11. Carry out some test operations manually (our recommendation: 3 tests operations)
12. Pay attention to smooth engagement of the contacts (measurement “k”) (Fig. 15)
13. If the engagement of contacts is not smooth (without jerks), then loosen current-path fixing bolts in the ON position and tighten again (Fig. 6); then repeat >12. mounting step
14. Treat contact surfaces of high-voltage terminals (17)
15. Treat contact surfaces of high-voltage connectors (not included in scope of supply)
16. Mount high-voltage connectors
17. Cable disconnector (refer to appropriate sag tables)
18. Adjust distances in the contact zone (measurement “b” and “c”) if necessary by means of stud bolts (13) of the rotary pedestals (70) (Fig. 17)
19. Tighten all connections
20. Carry out a test operation manually
21. Check, if contacts are engaging smoothly, otherwise repeat 13. mounting step
22. Set disconnector manually to OFF position

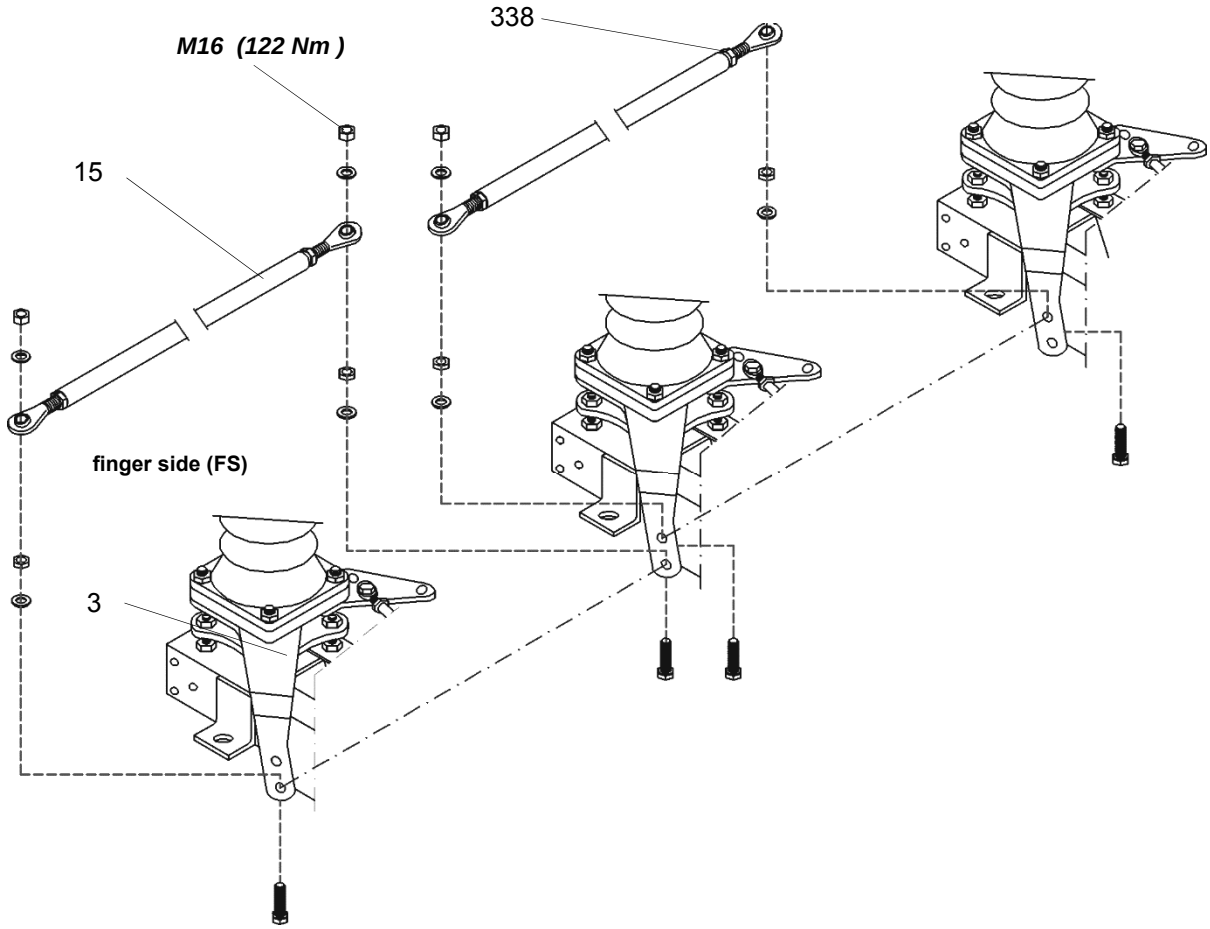

Figure 12 Mounting of coupling of disconnectors: Disconnector poles in parallel

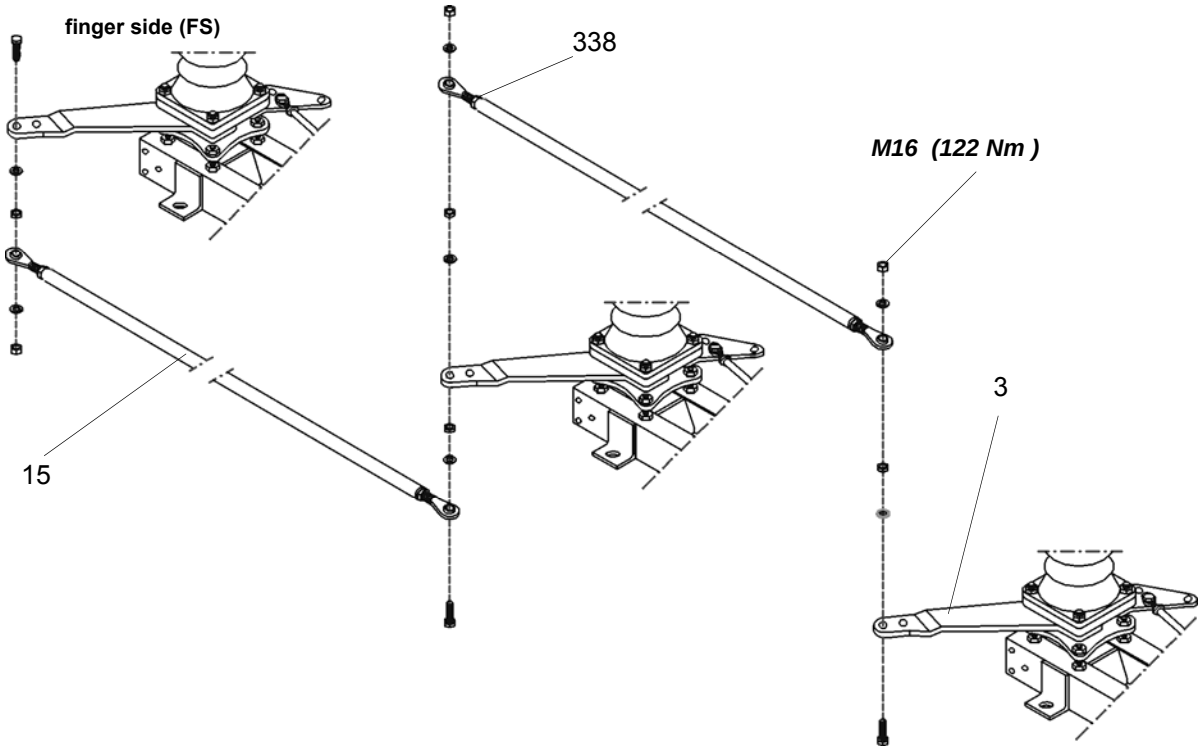

Figure 13 Mounting of coupling of disconnectors: Disconnector poles in series

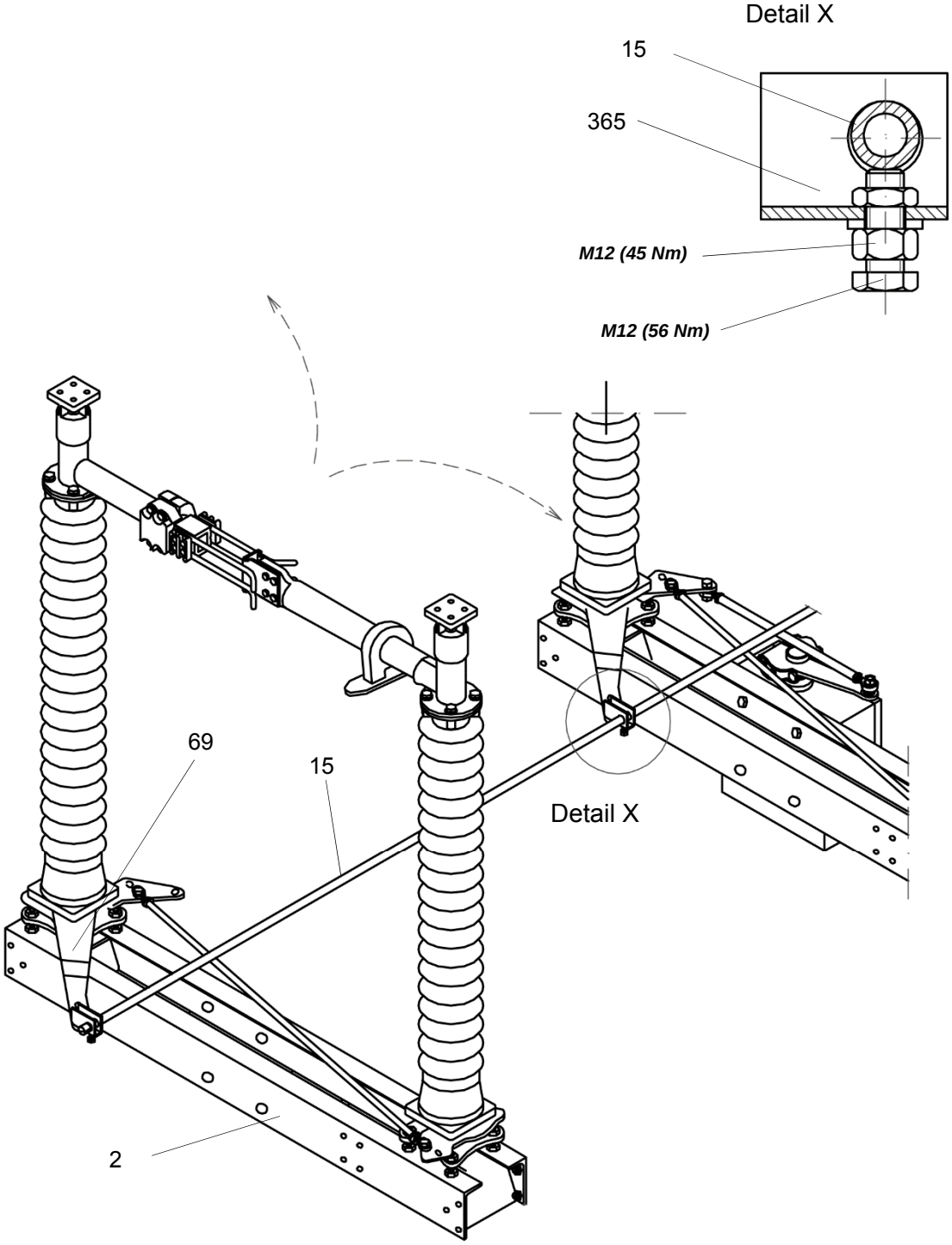

Figure 14 Mounting of coupling of disconnectors: Disconnector SGF72.5 - poles in parallel

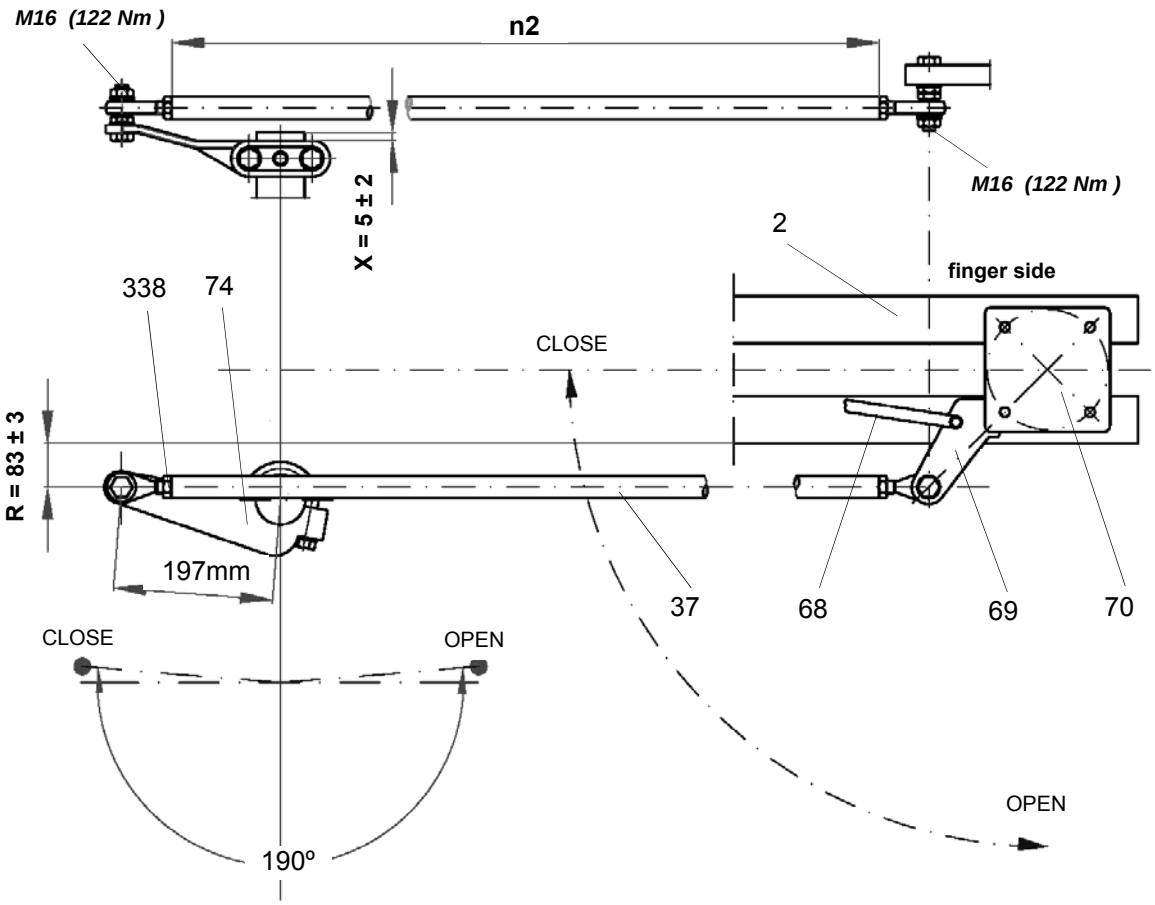

Rated voltage kV	dimension **n2** mm
72,5	412
123	612
145	737

Figure 15 Adjustment of operating mechanism for disconnector
- if operating mechanism for disconnector at opening side

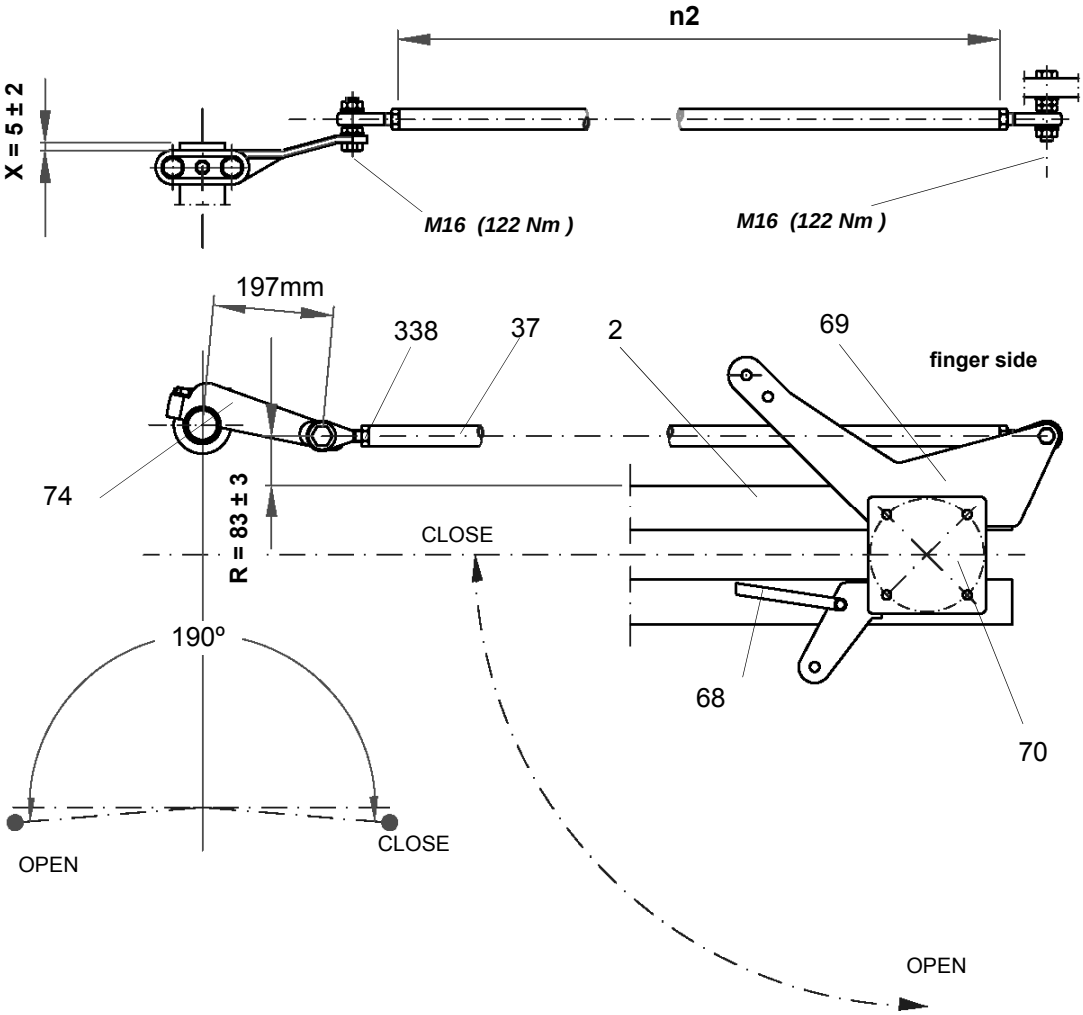

Rated voltage kV	dimension **n2** mm
72,5	412
123	612
145	737

Figure 16 Adjustment of operating mechanism for disconnector
- if operating mechanism for disconnector at opposite opening side

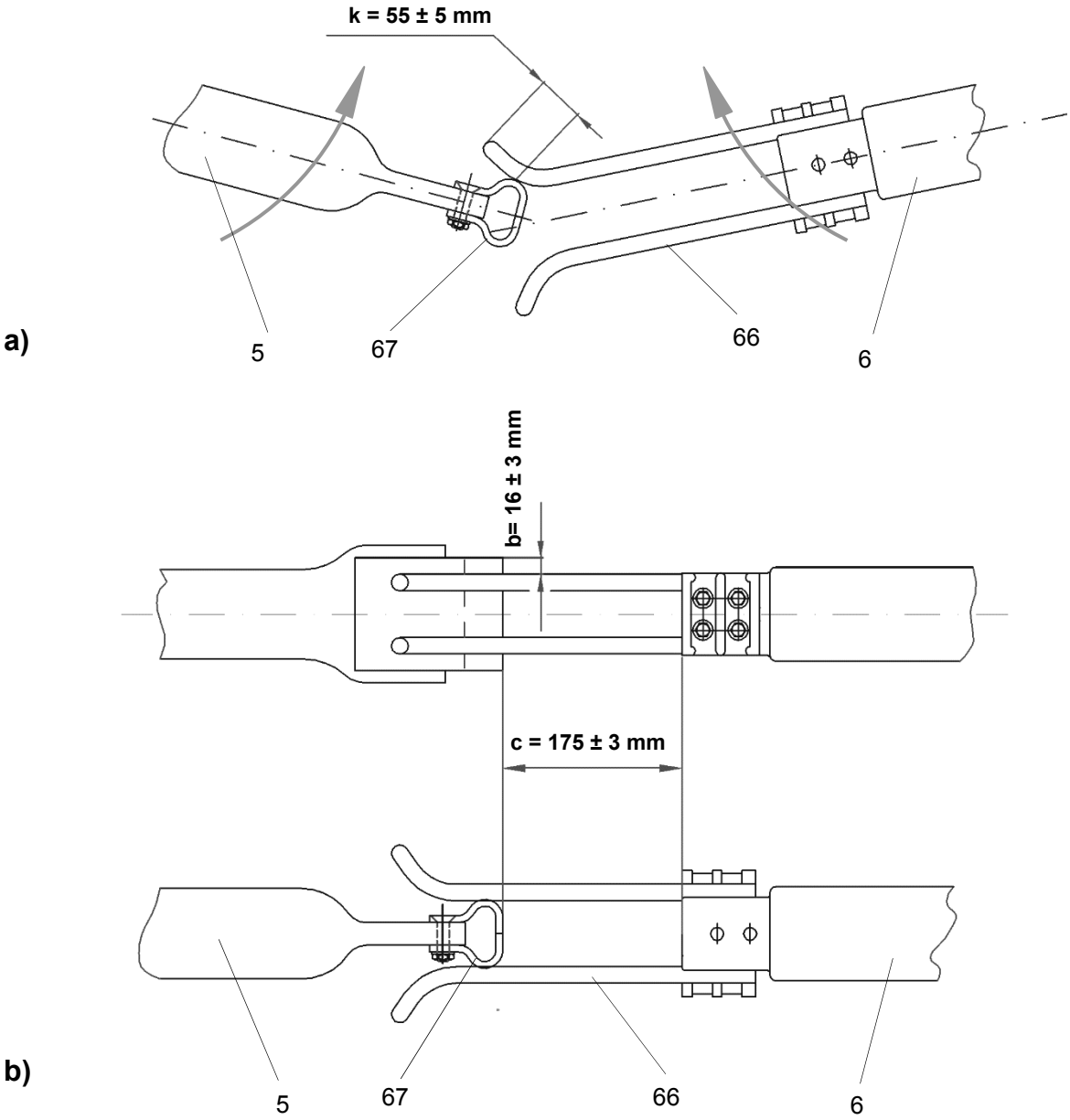

Figure 17 Disconnector main contacts, engagement
a) Adjusting of main contacts during closing operation
b) Adjusting measurements of contacts

7. Mounting of Earthing Switch type TEC

Disconnector can be equipped with build-on earthing switch type TEC. The earthing switches can be mounted in configurations:

- on finger side (FS)
- on contact side (KS)
- on both sides (FS + KS)

Descriptions in this service instruction are valid for standard variants. In case of special solutions use additional documentation (dimension drawings made especially for the project

7.1 Mounting of Operating Mechanism for Earthing Switch

Make sure that operating mechanism is in the ON position (as delivered state). If the operating mechanism is in the OFF position, set it to On position using the emergency hand crank (39).

The procedure of mounting of operating mechanism for earthing switch is similar to mounting of operating mechanism for disconnector. In order to define the pole where operating mechanism is mounted, use dimension drawing supplied with project.

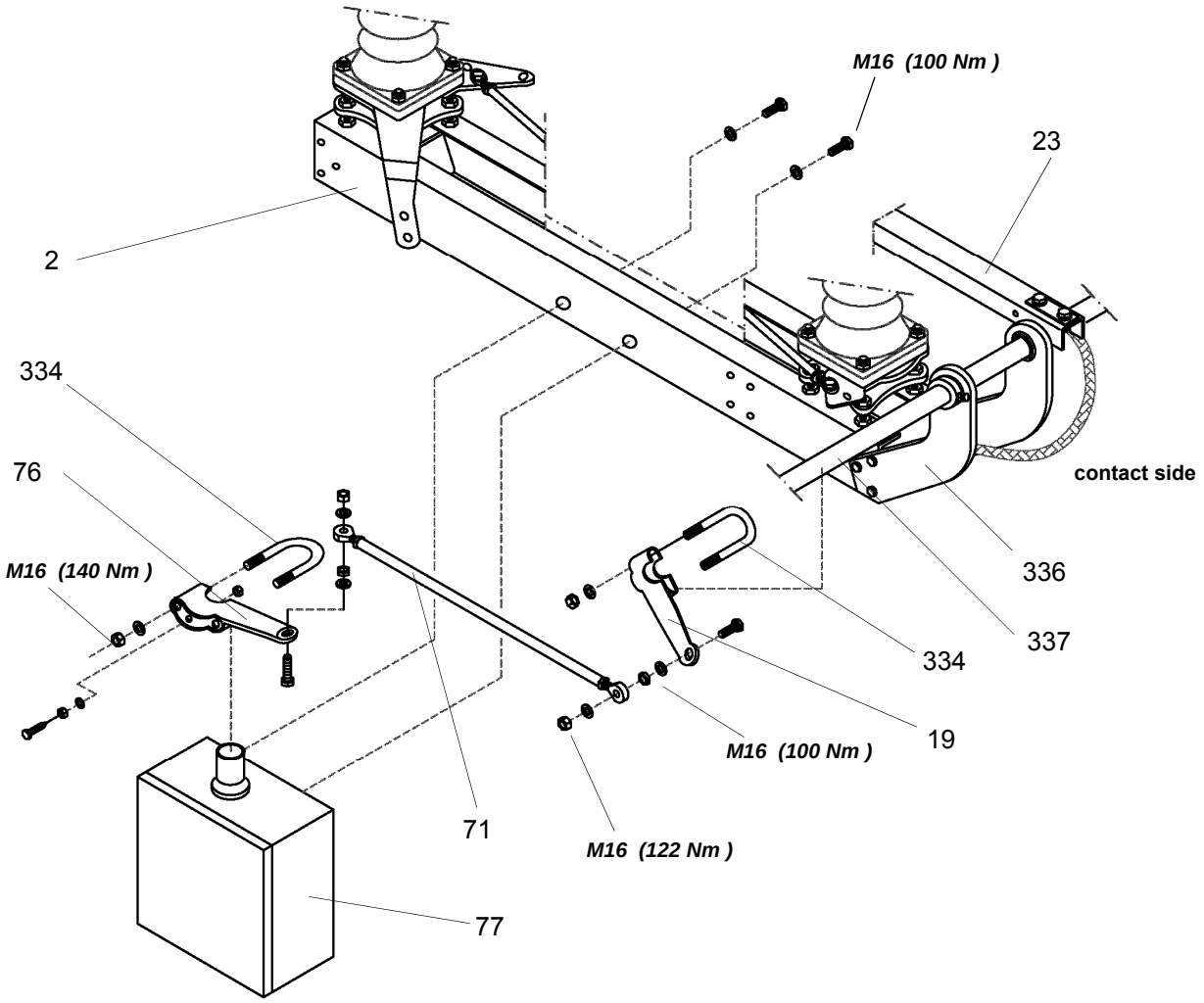

Figure 18 Mounting of operating mechanism for earthing switch -direct mounting

7.1.1 Direct mounting

1. Unpack operating mechanism (77)
2. Tighten operating mechanism to disconnector base (2) [Fig. 18]
3. Fit operating lever (76) on the shaft end of the operating mechanism according to mounting side

7.1.2 Separate Mounting

In case of separate mounting of operating mechanism for earthing switch, the mounting of steps are depended on measurement m3 of operating shaft (46)

- Separate mounting if measurement m3 < 6 m
- Separate mounting if measurement m3 = 6…12 m

Mounting steps:

1. Unpack operating mechanism (77)
2. Mount pivot bearing (42) on disconnector base (221) (Fig. 10)
3. If measurement m3 = 6…12 m: Mount additional pivot bearings in the envisaged positions
4. Insert operating shaft (43) through the pivot bearing (Fig. 10)
5. If measurement m3 = 6…12 m: Insert individual parts of operating shaft (43) through the pivot bearings [Fig. 10]
6. Vertically align operating mechanism by operating shaft (43)
7. Calculate required length of operating shaft (43) and mount
8. Remove operating shaft again and shorten to suitable length
9. After shortening, coat intersection surface with the zinc paint
10. Grease thrust bearing (330), inside, and collared bush (331), outside, with grease (Fig. 8; 10)
11. Repeat operating steps 5. and 6., threading thrust bearing (330) and collared bush (331) in correct sequence onto the operating shaft
12. If measurement m3 = 6…12 m: Connect individual parts of operating shaft to coupling parts (334, 335) (Fig. 10)
13. Tighten operating mechanism and pivot bearing
14. Connect shaft end of operating mechanism and operating shaft (43) to coupling parts (334, 335)
15. Mount operating lever (76) on upper end of operating shaft (43) (Fig. 18)

7.2 Mounting of Earthing Switch

7.2.1 Earthing Switch poles in Parallel

Make sure that the disconnector poles are OFF position before mounting the earthing switches.

Mounting steps:

1. Grease clamp sleeves (353) (Fig. 19) with grease Mobilgrease 28
2. Bring earthing-switch links (336) into mounting position by driving home the clamp sleeves on base frame (221) on the side of the contact arm (23) (Fig. 19)
3. Mount base frame for earthing switch (336a) onto pole(s) where operating mechanism for eathing switch is mounted. Refer to dimension drawing
4. Tighten earthing connections (79). Caution: Use two earthing connections for rated short-time currents > 40 kA,1 sec
5. Tighten earthing-switch links (336), and base-frame of earthing switch (336a) (Fig 18)
6. Grease thrust bearing (330), inside, and collared bush (331), outside, with Mobilgrease28 and mount with collared bush (331), making sure that the thrust bearings are at the specified side
7. Mount earthing-switch shaft (337)
8. Tighten locking screw in collared bushes (331) and secure with lock nut
9. Set operating mechanism for earthing switch to the ON position
10. Set premounted operating lever (76) to the correct position (Fig.29; 30)
11. Mount earthing-switch lever (19) on the earthing-switch shaft (Fig. 16)
12. Mount operating rod (71) (Fig. 29; 30) and adjust to the required length
13. With the operating mechanism in the ON position, adjust spacing dimensions for operating lever (76)
14. Tighten operating lever (76) and earthing-switch lever (19)
15. Treat contact surface for earthing contact (18) on the current path (Fig. 36; 37)
16. Treat earthing contact (18) and mount on current path (5) or (6) (Fig.34)
17. Wipe contact finger (20) with cloth and grease
    (if disconnector is equipped with AgC lubrication-free contacts, greasing is not necessary)
18. Mount tubular contact arms (23) on earthing-switch shaft (337)
19. Set tubular contact arms (23) manually to the ON position until contact fingers (20) are up against stop (21)
20. Align contact finger (20) and earthing contact (18) at right angels to each other and tighten earthing contact (18) (Fig. 28)
21. Preset distance “Z” between rear contact finger (20) and stop (21) of earthing contact (18) (compensation for torsion of earthing-switch shaft) (Fig. 28)
    Earthing switch arm of pole witch operating mechanism should be closing as last one.
22. Tighten nuts of (329) on the earthing-switch shaft
23. Set earthing switch to the OFF position
24. Shorten operating rod (71) so that, during a manual test operation, all the rear contact fingers are up against the stop in the ON position
25. Check distance between contact finger (20) and stop (21). The distance on one pole of 3-pole group must not be more than 5 mm (Fig. 28)
26. If necessary, correct the contact of the contact fingers by adjusting operating rod (71) and check by means of test operation

27. Tighten lock nuts (338) on the operating rod (left-, right-hand thread!) (Fig. 30)
28. Tighten locking screw in the earthing-switch lever (19) and secure with lock nut
29. Set earthing switch to the ON position
30. Loosen nuts (340) on the clamp re-tighten (Fig. 20) so that contact fingers (20) are uniformly up against earthing contact (18)
31. Grease contact fingers (20) and earthing contact (18)
32. In case of mechanical interlocking:
    Next step: Chapter 8: Mounting of Mechanical Interlocking

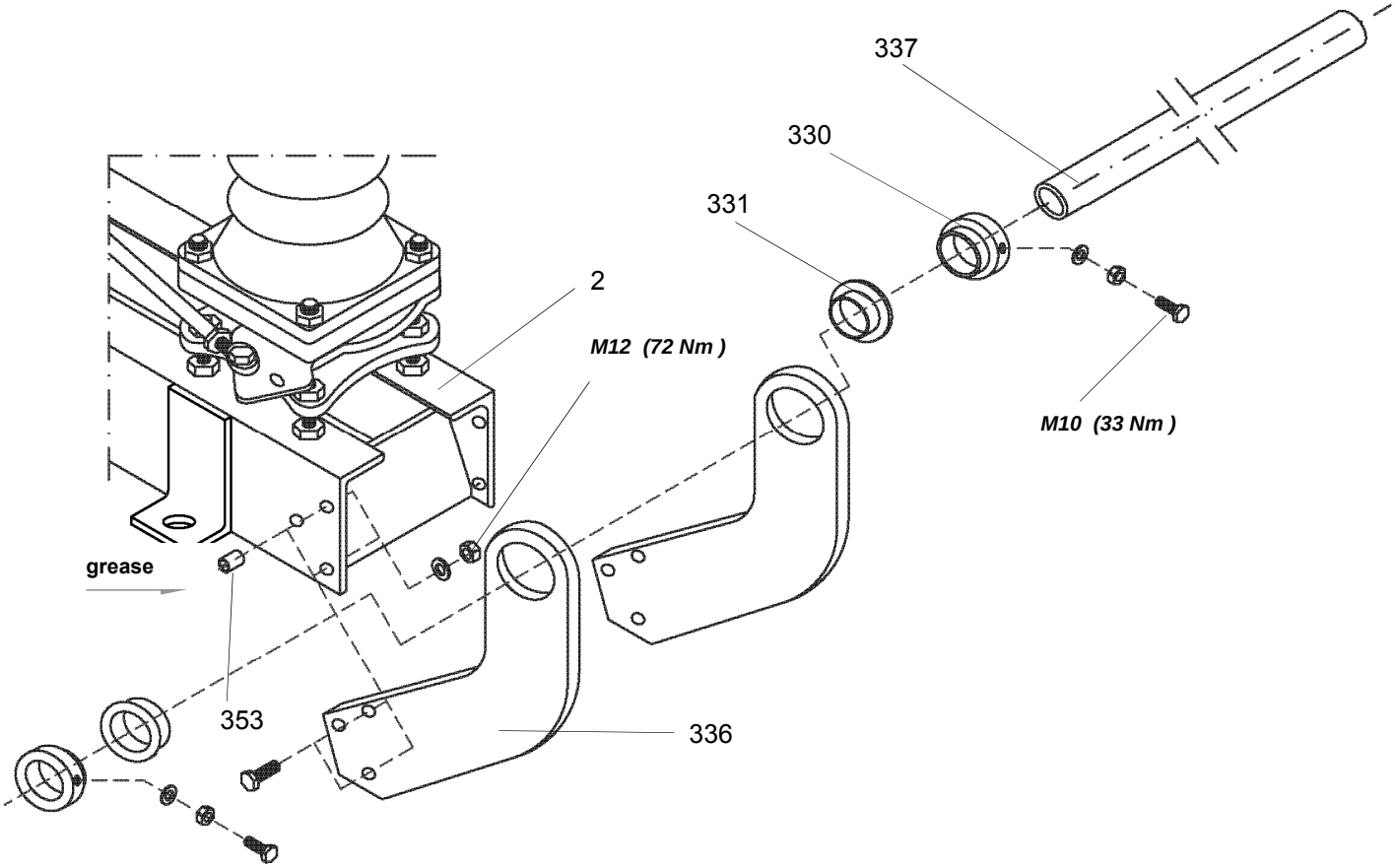

Figure 19 Mounting of earthing switch link, earthing switch poles in parallel, :
Mounting of earthing-switch link (336); Mounting of earthing-switch base-frame (336a) mounted on the pole, where earthing switch mechanism is placed.

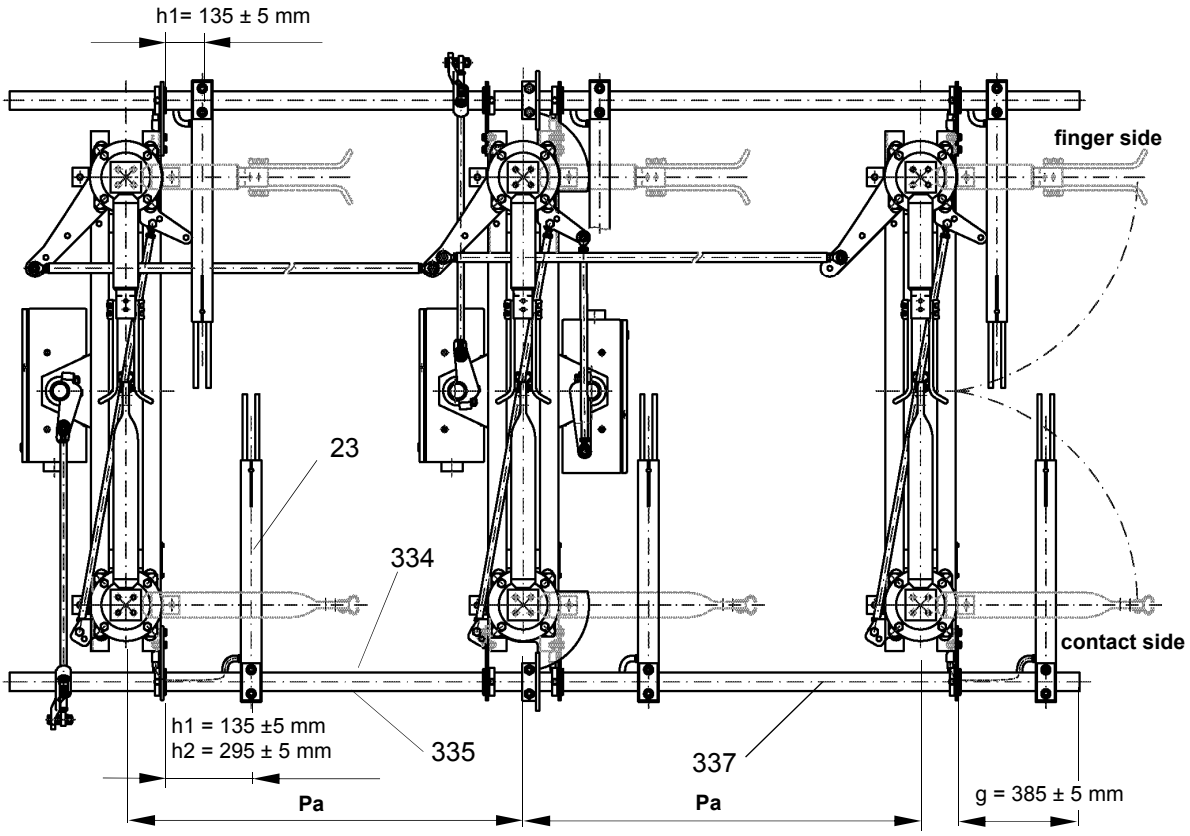

* for pole distance Pa > 2500 mm

h1 - for one build-on earthing switch (on finger or contact side)

h2 - for two build-on earthing switches (on finger and contact side)

Figure 20 Mounting of earthing switch, earthing-switch poles in parallel

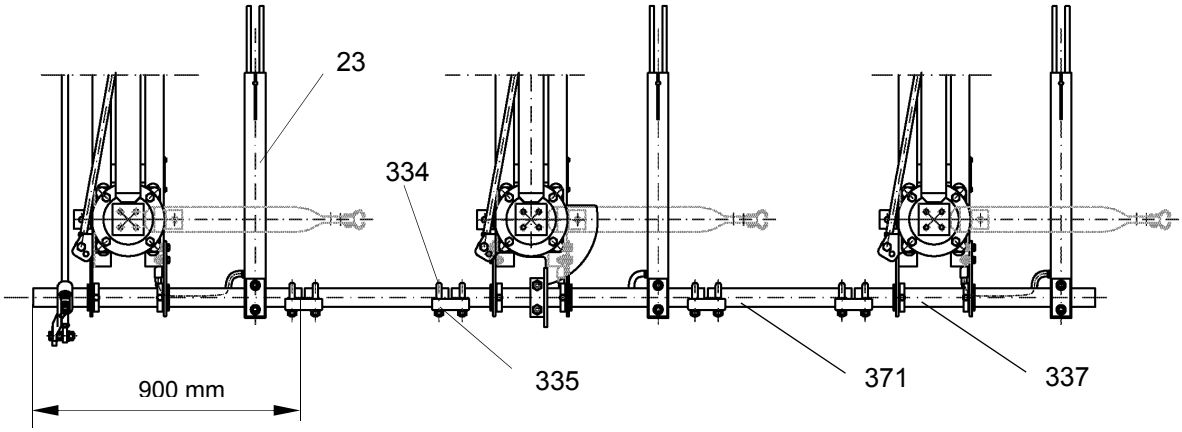

Figure 21 Mounting of earthing switch in parallel if disconnector delivered as complete poles

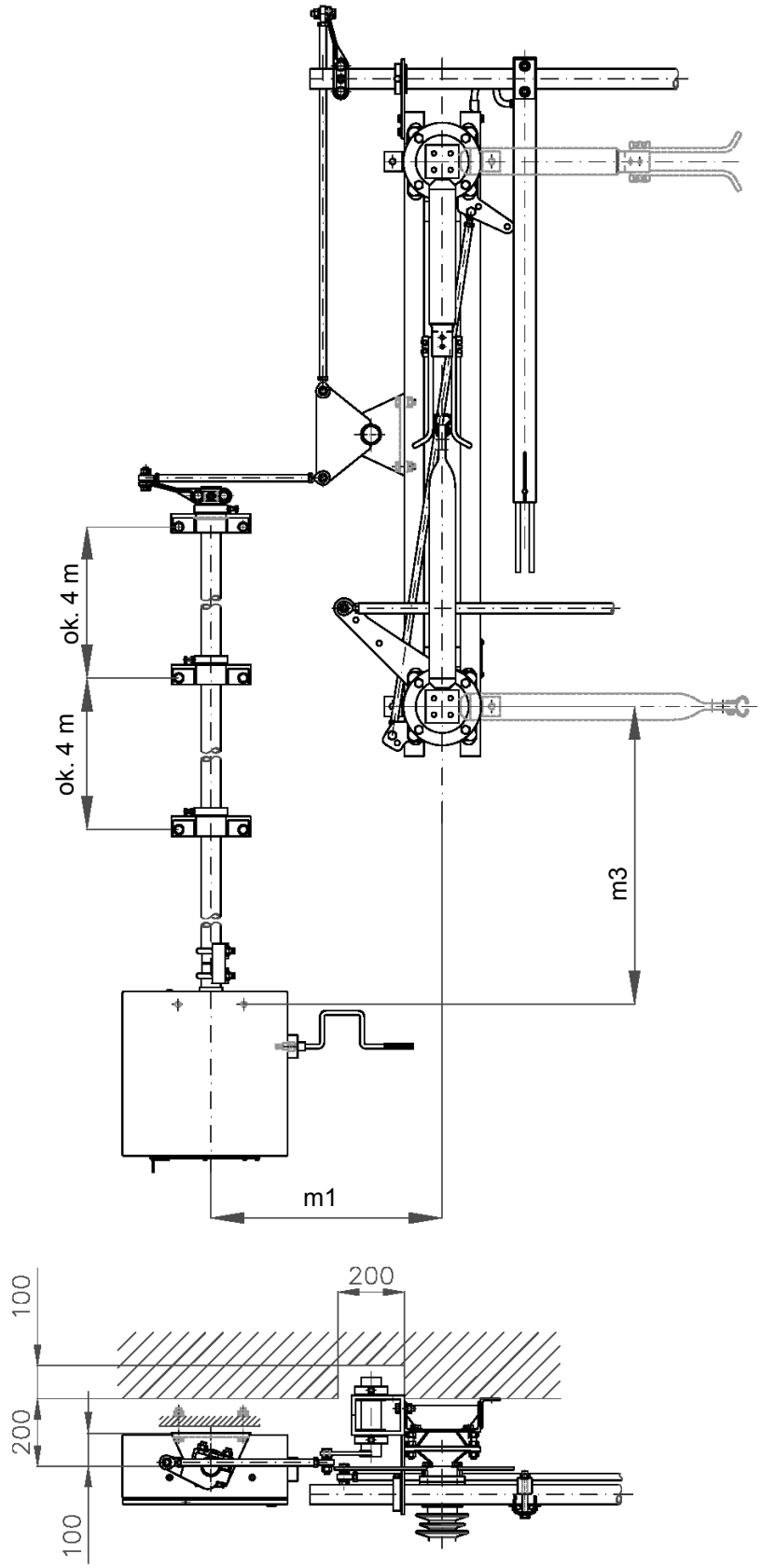

Figure 22 Mounting of operating mechanism: Wall mounting

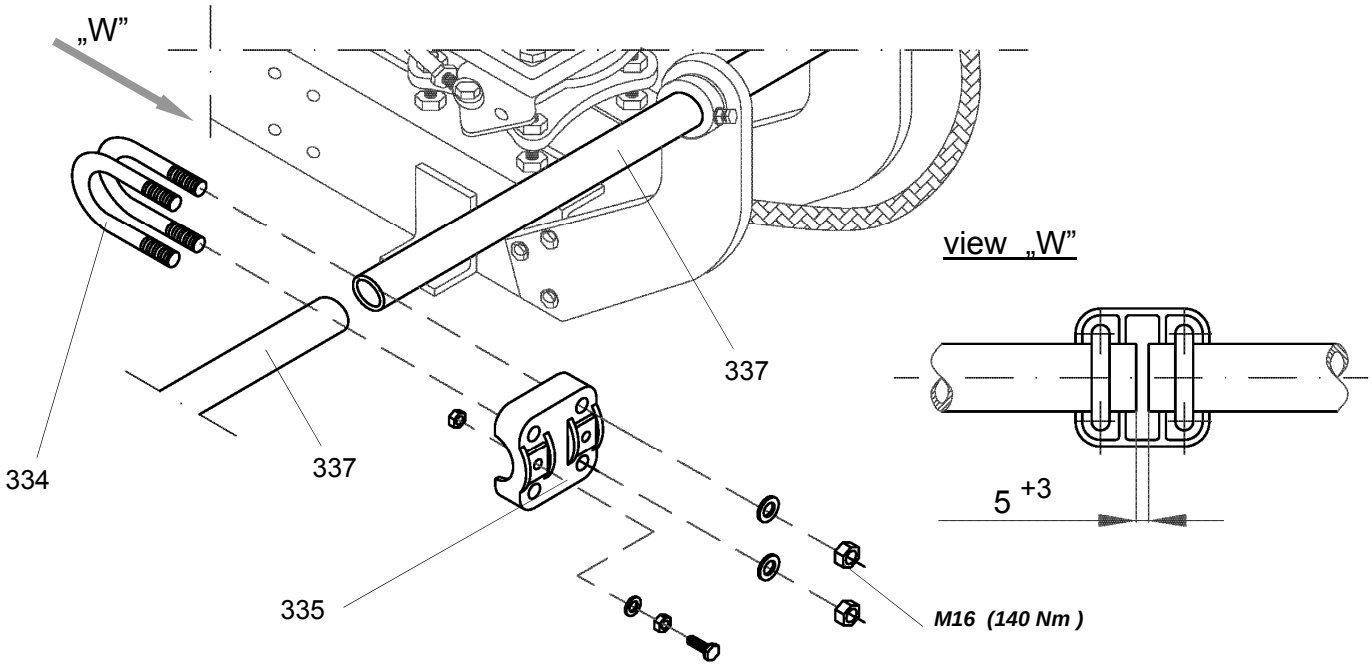

Figure 23 Mounting of coupling piece (342, 334) for connection of earthing-switch shafts (337)

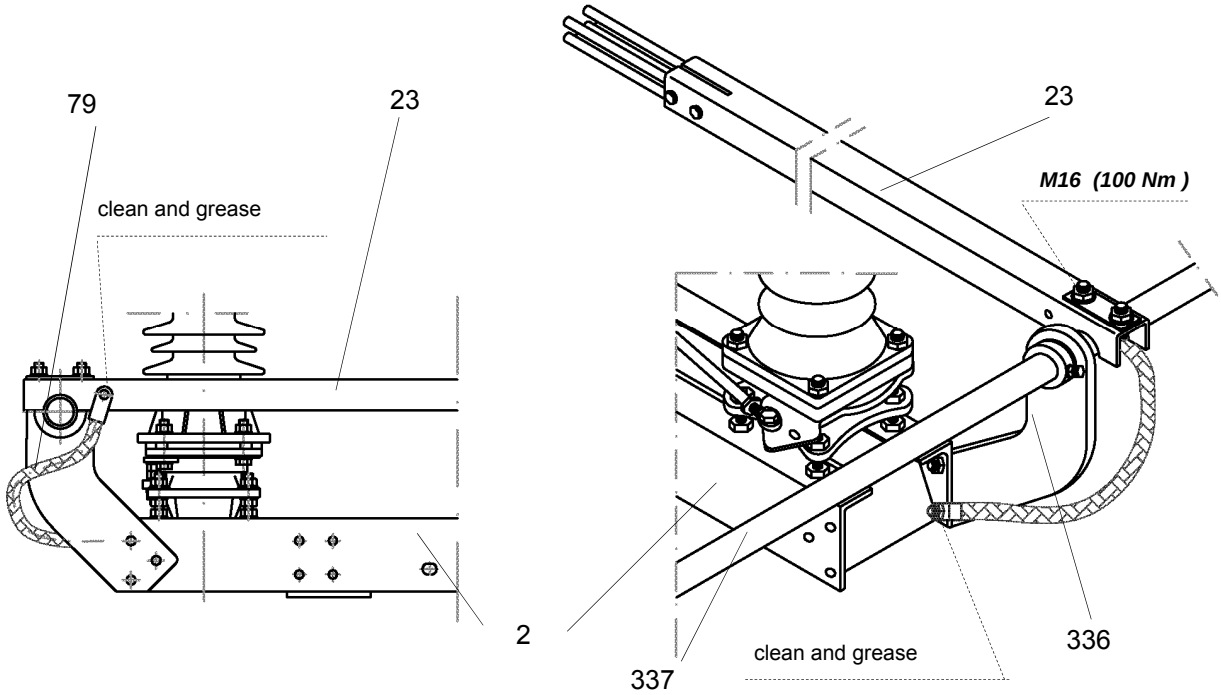

Figure 24 Mounting of earthing connections (79, 343) for peak-withstand current ≤ 100kA

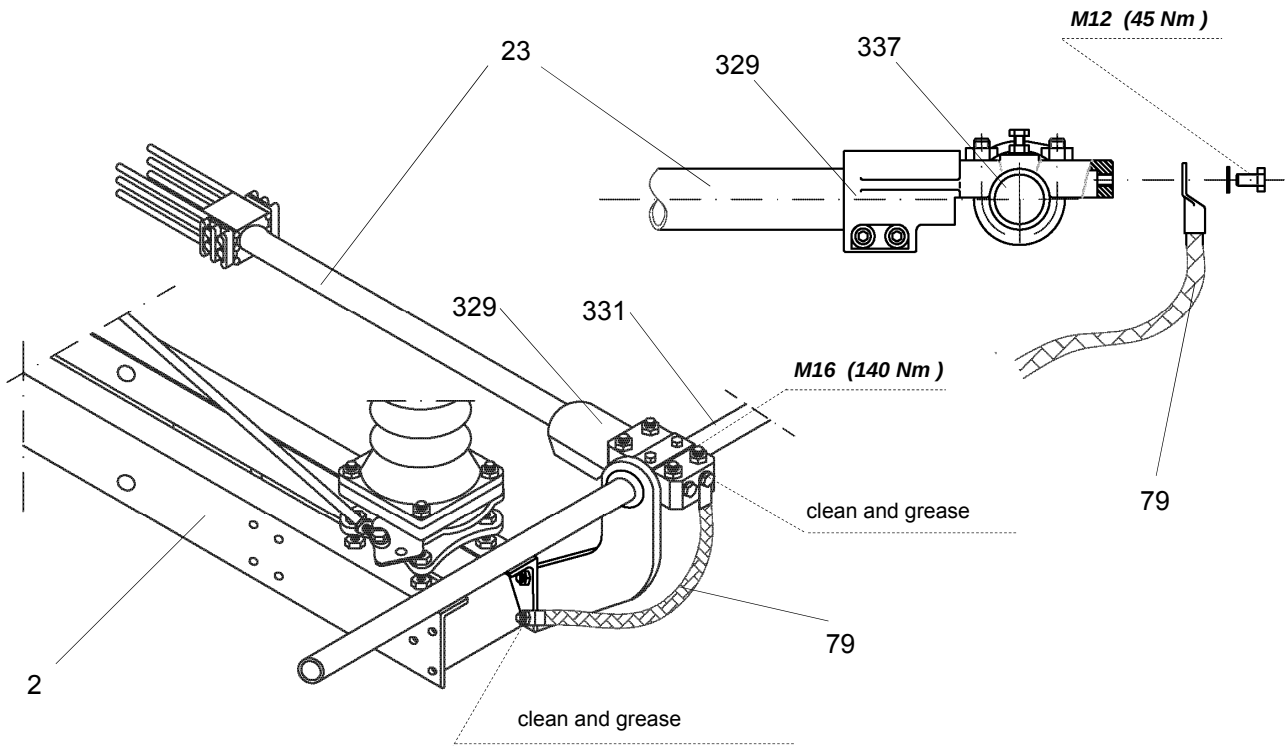

Figure 25 Mounting of earthing connections (79, 343) for peak-withstand current ≤ 125kA

7.2.1 Earthing Switch poles in Series and Mounting on Individual Disconnector Poles

Mounting steps:

1. Grease clamp sleeves with grease (Mobilgrease28)
2. Place frame for earthing switch (336) or base frame of earthing switch (336a) into mounting position by driving home the clamp sleeves on sectional steel base frame (221)
3. Tighten earthing connections (79, 343) (Fig. 21)
4. Tighten base frame of earthing switch (336a)
5. Grease thrust bearing (330), inside, and collared bush (331), outside, with grease and mount with collared bush (331), making sure that the thrust bearing are at the specified side (Fig. 9)
6. Mount earthing-switch shafts (73)
7. Tighten locking screw in collared bushes (331) and secure with lock nuts
8. Set operating mechanism for earthing switch to ON position
9. Adjust premounted operating lever (19) on the earthing-switch shaft
10. Mount earthing-switch lever (19) on the earthing-switch shaft (Fig. 29; 30)
11. Mount operating rod (71) and adjust to the required length (Fig. 26; 27)
12. With the operating mechanism in the ON position, adjust position for operating lever (76) (Fig. 29; 30)
13. Tighten operating lever (76) and earthing-switch lever (19)
14. Set earthing-switch lever (339) to position (Fig. 28)
15. Mount coupling rods (15), aligning earthing-switch lever (339) to the required measurement (Fig. 29)
16. Treat contact surface for earthing contact (18) on the current path (Fig. 33)

17. Treat earthing contact (18) and mount on current path (5) or (6) (Fig. 36)
18. Wipe contact finger (20) with cloth and grease
    (if disconnector is equipped with AgC lubrication-free contact greasing is not necessary)
19. Mount contact arms (23) with clamp (329) on earthing-switch shafts (73)
20. Set tubular contact arms (23) manually to the ON position until contact fingers (20) are up against stop (21) (Fig. 28)
21. Align contact finger (20) and earthing contact (18) at right angles to each other and tighten earthing contact (18)
22. Preset distance “Z” between rear contact finger (20) and stop (21) of earthing contact (18) (compensation for play of coupling rods) (Fig. 31)
23. Tighten clamp (329) on the earthing-switch shafts
24. Set earthing switch to the Off position
25. Shorten operating rod (71) so that, in case of a manual test operation, all the rear contact fingers are against the stop in the ON position
26. If necessary, correct the contact of all contact finger on the operated pole by adjusting operating rod (71) and check by means of test operation
27. Tighten lock nuts on operating rod (left-, right-hand thread!)
28. Correct the contact of the contact fingers on the coupled poles by adjusting coupling rods (15) and check by means of test operation
29. Check distance between contact finger (20) and stop (21). The distance on one pole group of 3-pole group must not be more than 5 mm
30. Tighten lock nuts on coupling rods (15) (left-, right-hand thread!).
    Caution; *This mounting step is not applicable if the earthing switch is mounted on individual disconnector poles*
31. Tighten locking screw in earthing-switch lever (19) and secure with lock nut (Fig. 16)
32. Set earthing switch to the ON position
33. Loosen bolts (340) on the clamp and re-tighten so that contact fingers (20) are uniformly up against contact (18)
34. Treat contact finger (20) and earthing contact
35. In case of mechanical interlocking:
    Next step: Chapter 8: Mounting of Mechanical Interlocking

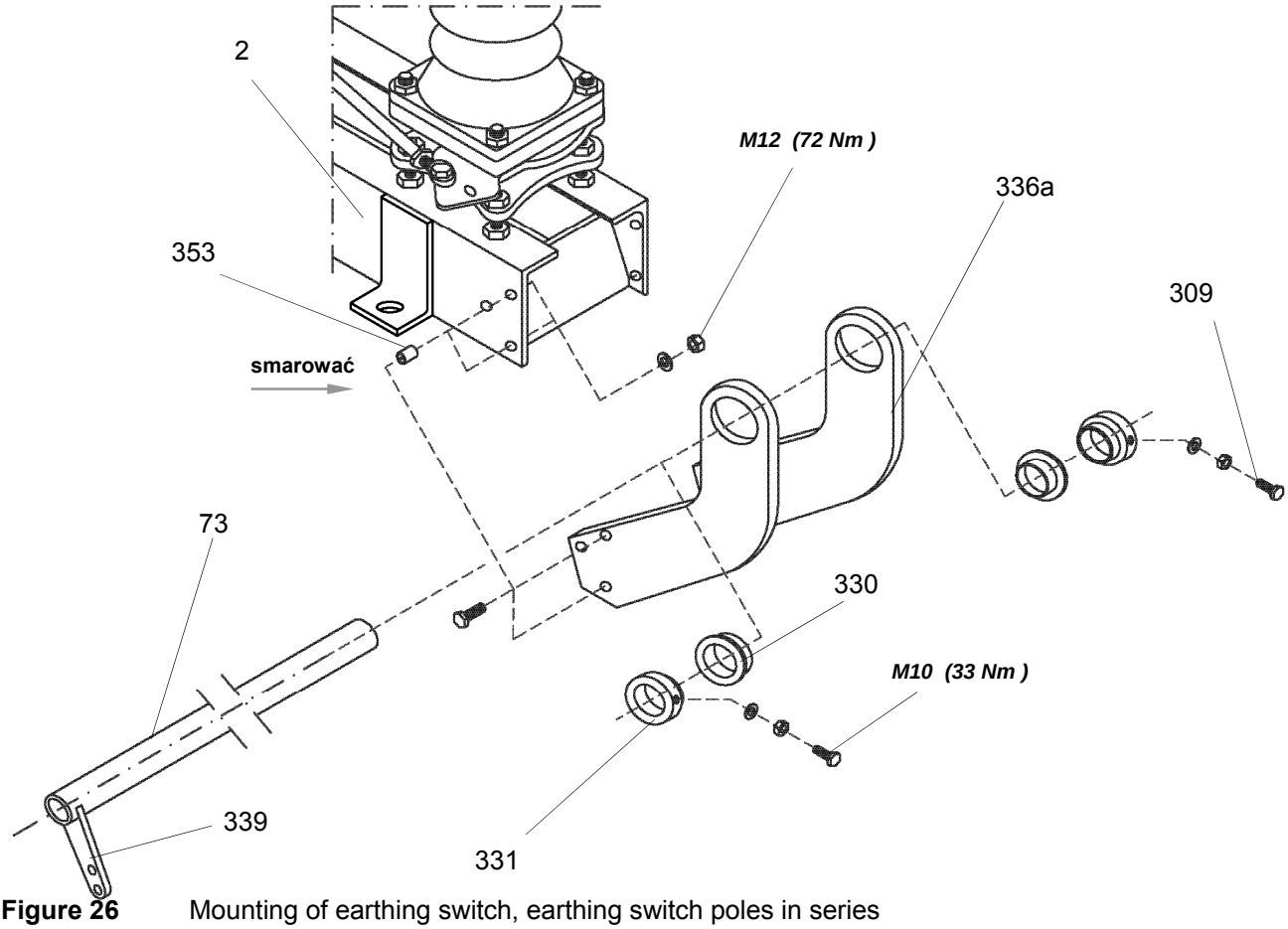

Figure 26 Mounting of earthing switch, earthing switch poles in series

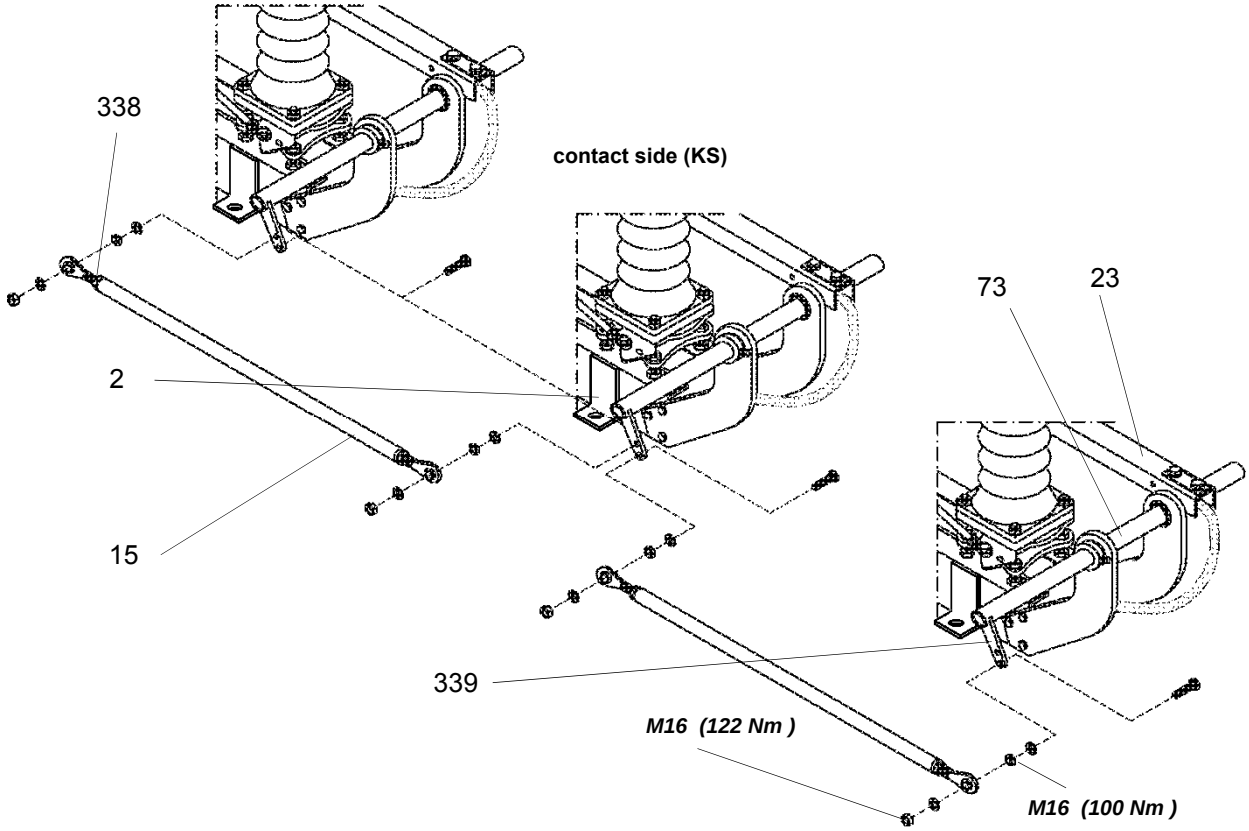

Figure 27 rthing switch poles in series: Mounting of coupling rods (15)

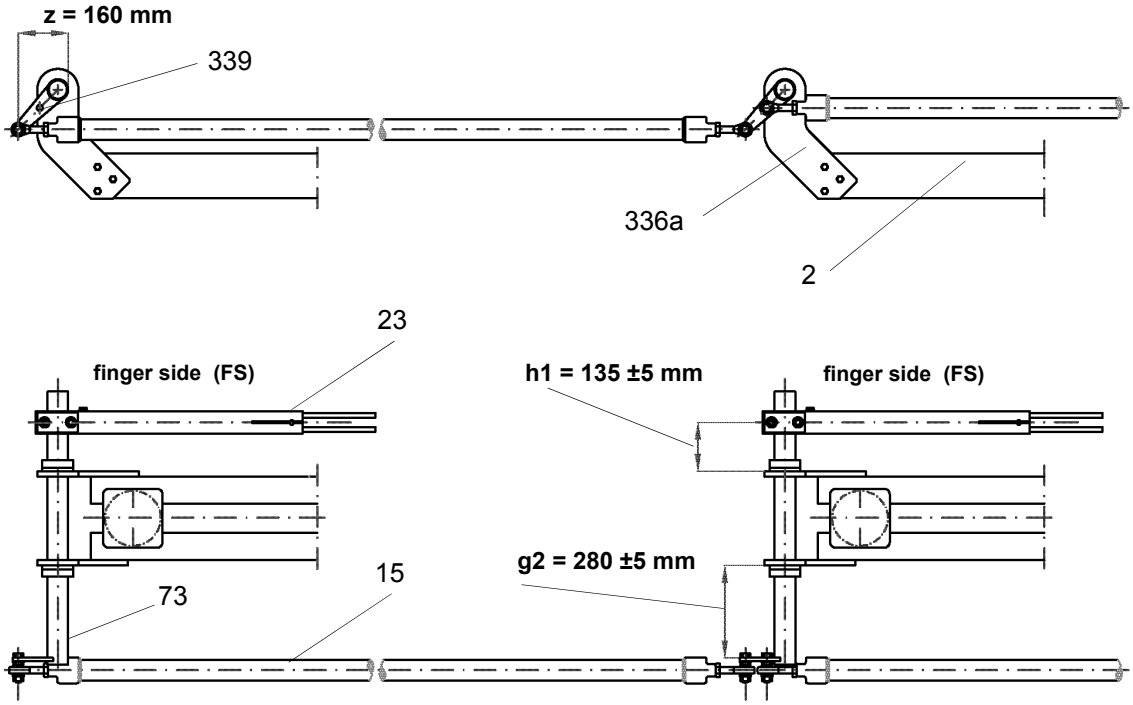

Figure 28 Adjustment measurements for earthing-switch shaft (73) and earthing switch lever (339).

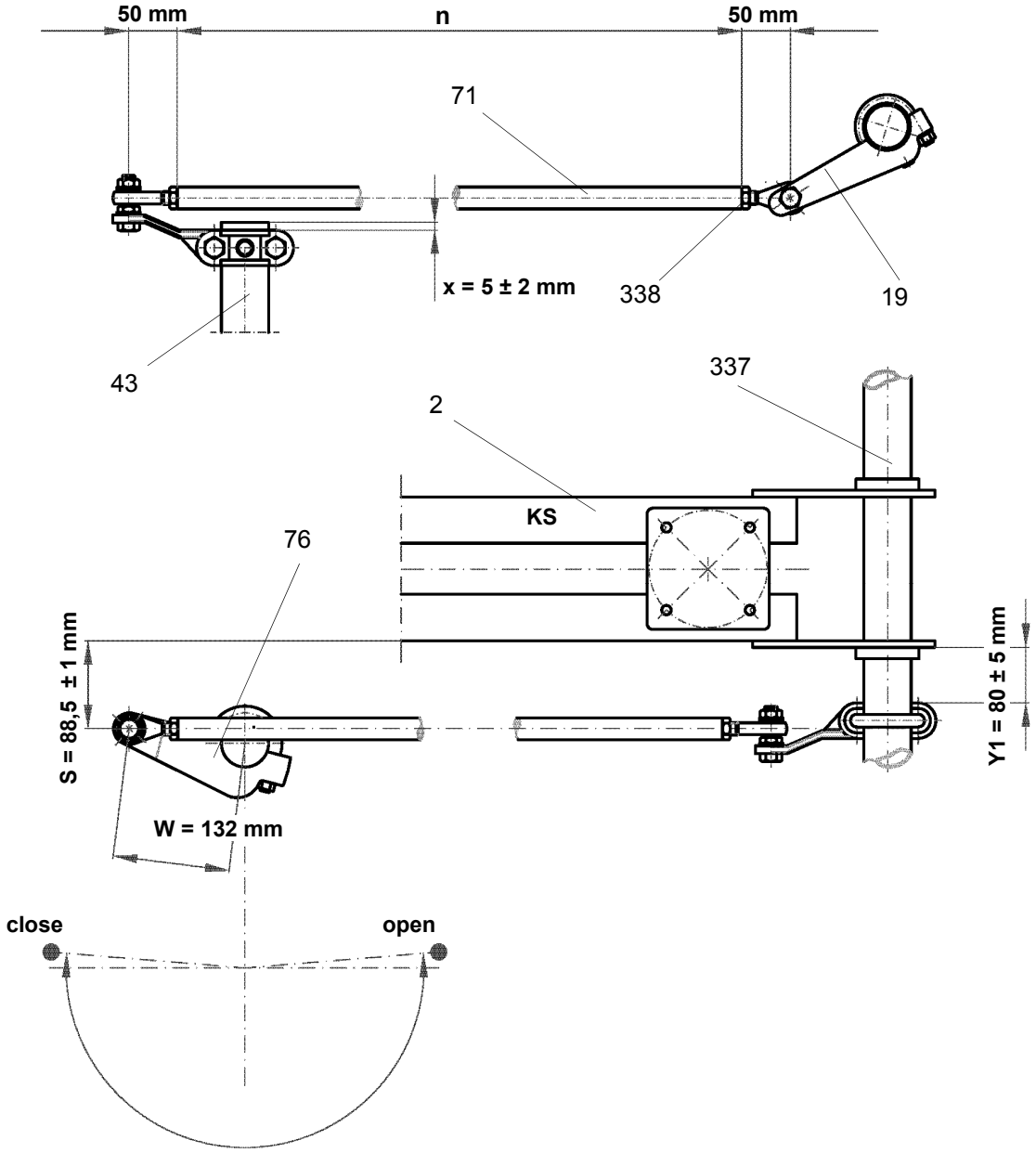

Rated voltage kV	dimension „**n**“ mm
72,5	660
123	862
145	987

Figure 29 Adjustment of operating mechanism for earthing switch -earthing switch on contact side

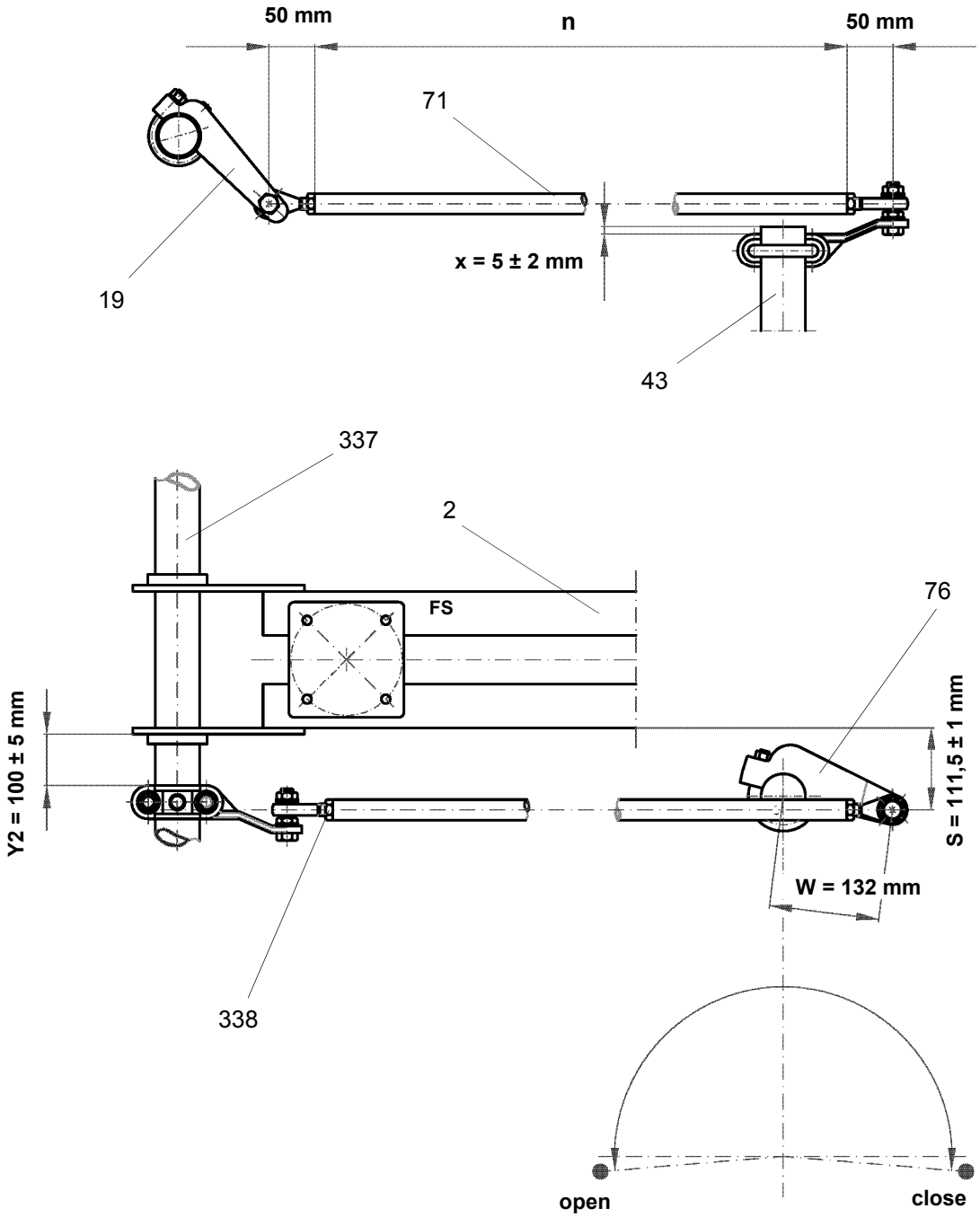

Rated voltage kV	dimension „**n**" mm
72,5	660
123	862
145	987

Figure 30 Adjustment of operating mechanism for earthing switch -earthing switch on finger side

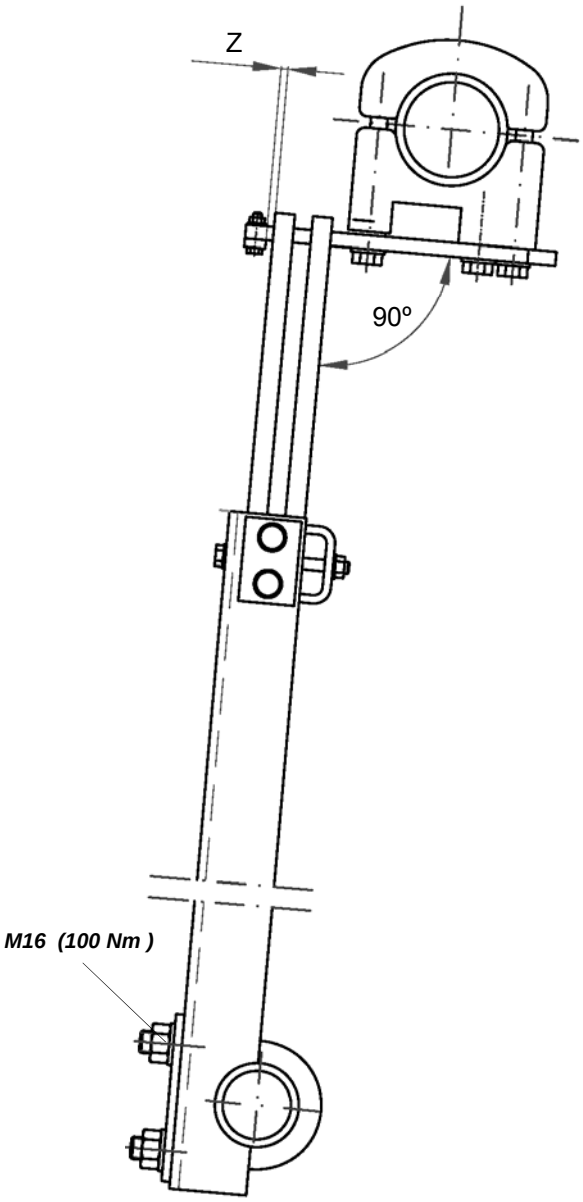

for peak withstand current ≤100kA

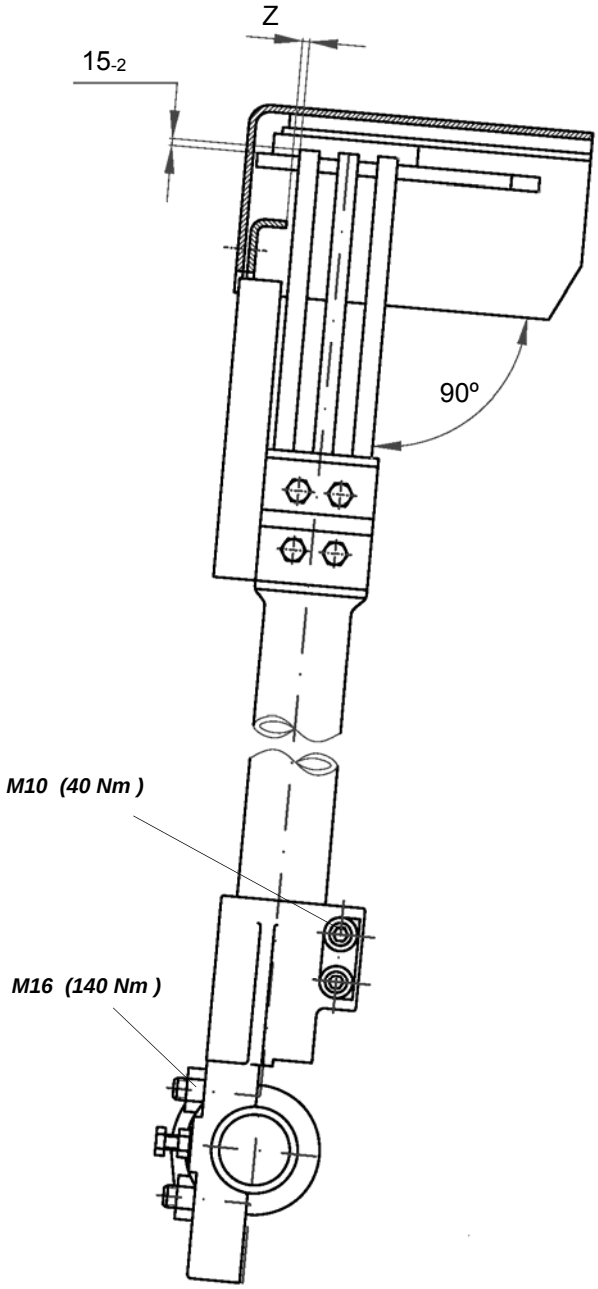

for peak withstand current ≤125kA

Pole distance	recommended presetting on poles a, b, c during mounting [mm]						Z (after mounting)
	2000…2999 mm			3000…3999 mm			
	a	b	c	a	b	c	
Operated pole: a	20	10	0	30	15	0	max. 5 (on one pole of 3-pole group)
Operated pole: b	0	10	0	0	15	0	
Operated pole: c	0	10	20	0	15	30	

Figure 31 Earthing contact (18), adjusting measurements

8. Mounting of Mechanical Interlocking

The mechanical interlocking must be mounted on pole, where operating mechanism for disconnector is installed.

Mechanical interlocking elements are mounted at the factory. Retrofitting is possible with co-operation with HAPAM erection specialists

Make sure that the disconnector is in ON position before mounting the mechanical interlock and that the earthing switch is in the OFF position

Mounting steps:

1. Mount interlocking segment (349) with U-clamping cover (334) on earthing switch shaft (337 or 73) in case of parallel arrangement or series arrangement of the disconnector poles (Fig.. 32)
2. With the disconnector in the ON position and the earthing switch in the OFF position, try to set the earthing switch manually to the ON position.
   The interlock must be block.
3. Set disconnector manually to the OFF position
36. Set earthing switch manually to the ON position, ensuring that there is sufficient distance between interlocking lever (350, 351) and earthing-switch link (336) (Fig. 33)
4. Tighten locking screw in the segment (349) and secure with lock nut
5. Next step: Chapter 10: Commissioning

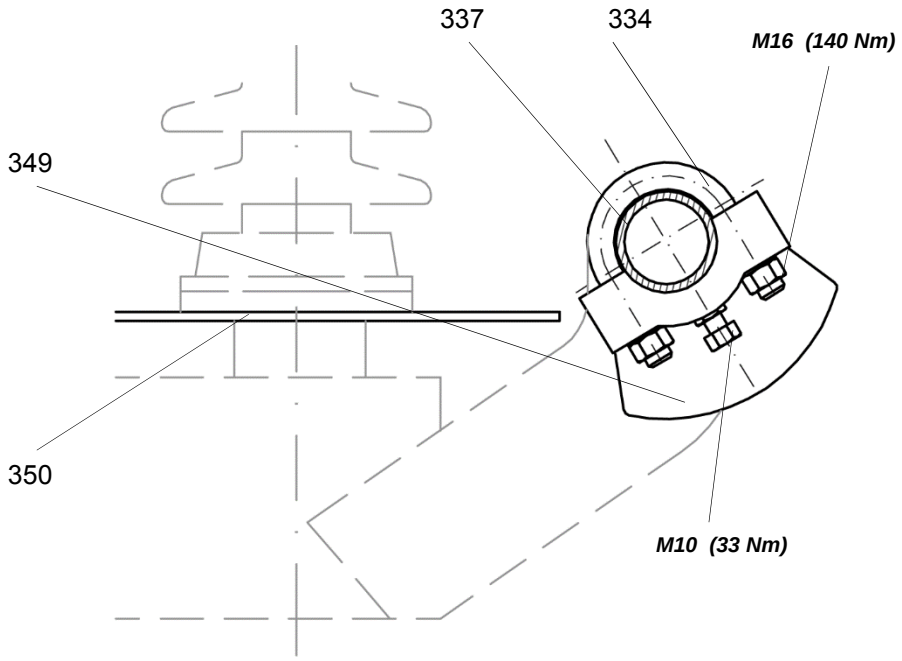

Figure 32 Mechanical interlocking segment

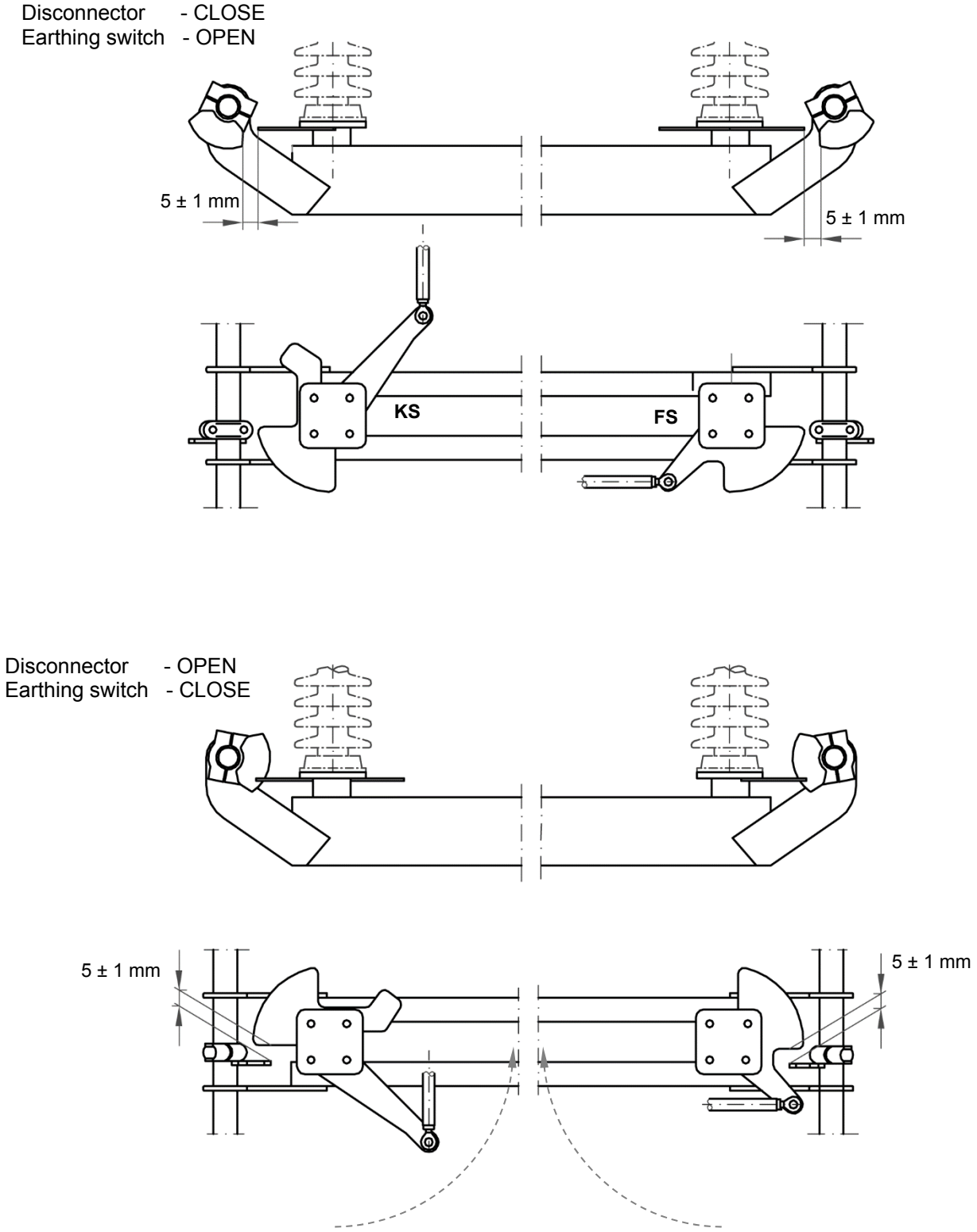

Figure 33 Mounting mechanical interlocking

9. Mounting of mechanical interlocking in end positions

Disconnector or earthing switch can be equipped witch possibility of blocking its arms in extreme positions (OPEN of CLOSE). The interlocking plate (352) in mounted on operating shaft (43). The fixed plate (353) is mounted to supporting structure and it is out of supply (Fig. 34)

Caution: *The fixed plate (353) should be mounted to supporting structure before mounting of operating shaft (43)*

There are two variants of locking:
- padlock
- lock with key (“castell lock”)

Mounting steps:

1. Set disconnector (earthing switch) in CLOSE position
2. Mount the interlocking plate (352) on operating shaft (43) in position that the holes of fixing and interlocking plate should be in axis (Fig. 34)
3. If the lock (“castell lock”) is used, check if the lock-bolt freely come into hole the plate (352)
4. Set disconnector (earthing switch) in OPEN position and check position of interlocking plate and fixing plate as in points 2; 3
5. Tighten nuts of U-clamp (334)

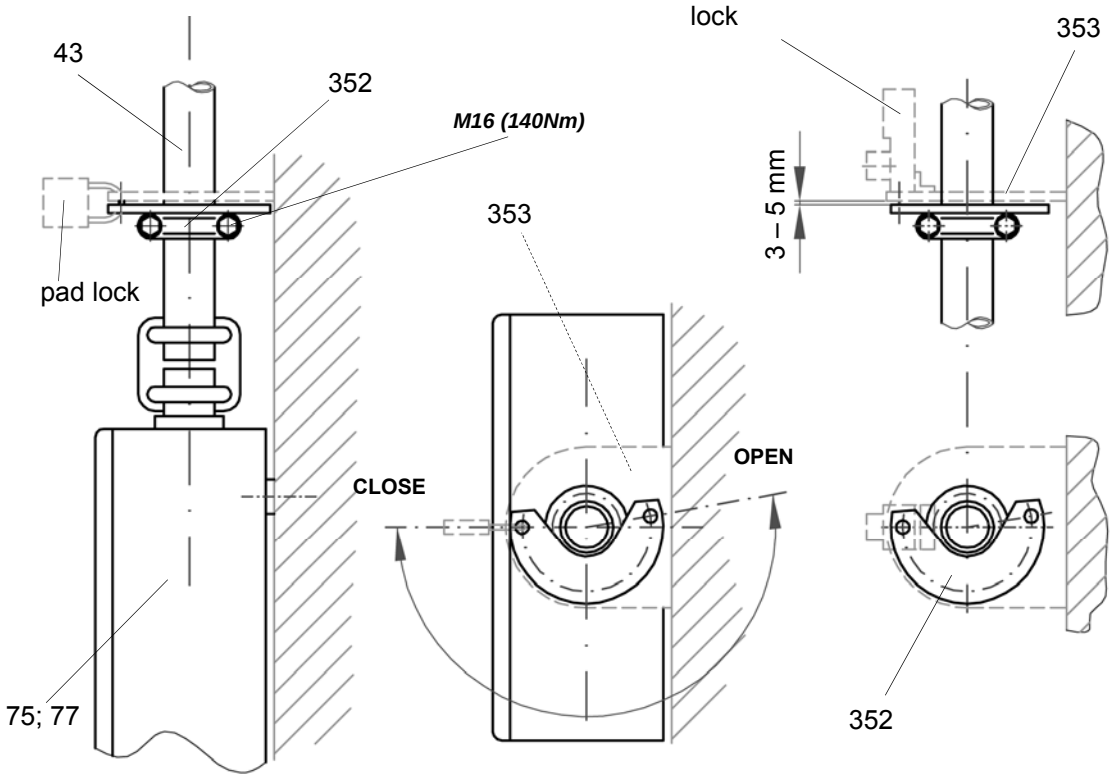

a) version with padlock

b) version with lock („castell lock”)

Figure 34 Mounting of end position interlocking plate

10. Commissioning and De-commissioning

The diagonal rod (68) are adjusted at the factory for precise engagement of the main contacts. The adjustment may only be changed by HAPAM-trained specialist erectors

10.1 Commissioning of Disconnector

Commissioning steps:

1. Carry out a test operation manually, checking that there is satisfactory contact engagement of disconnector
2. If necessary, correct contact engagement

10.2 Commissioning of Earthing Switch

Commissioning steps:

1. Carry out a test operation manually, checking that there is symmetrical engagement of contact fingers (20) on earthing contact (18)
2. If necessary, correct symmetrical engagement by loosing and re-tightening 4 bolts (340) on clamp (329)

10.3 Commissioning of Operating Mechanism for Disconnector

Commissioning steps:

1. Check operating mechanism according to the service instruction supplied
2. Check dead-center position of operating rods (37) in the ON and OFF position
3. If necessary, correct dead-center position by adjusting operating lever (74) and / or operating rod (37)
4. Remove bag with desiccative from operating mechanism and start electric heating of operating mechanism

10.4 Commissioning of Operating Mechanism for Earthing Switch

Commissioning steps:

1. Check operating mechanism according to the service instruction supplied
2. Check dead-center position of operating rods (37) in the ON and OFF position
3. If necessary, correct dead-center position by adjusting operating lever (76) and / or operating rod (71)
4. Check contact of rear contact fingers against stop (21) of earthing contact (18)
5. Remove bag with desiccative from operating mechanism and start electric heating of operating mechanism

10.5 De-commissioning

The type SGF two-column rotary disconnector is environmentally friendly product.

If the herein-described switching device is de-commissioning, the materials removed should be reused. The switching device can be disposed of in an environmentally friendly manner on the basin of existing legal regulations.

Recycling is in the form of mixed scarp. The device contains the following materials:

- Steel
- Copper
- Aluminium
- Cast iron
- Synthetics
- Rubber materials in the form of sealing materials
- Ceramics
- Lubricants

There are no hazardous materials within the meaning of the regulations for handling dangerous material.

We shall be glad to advise you at times regarding questions of disposal.

11. Maintenance

We recommend that the inspection intervals given in the table for normal and extreme ambient conditions be complied with. They are essential to the trouble-free operation of the equipment.

In case of work on high-voltage equipment, there is danger to life if the applicable safety rules are not observed and complied with

Ambient condition	**Inspection intervals**	**Year of commissioning**
Normal	After every 5 operating years or After every 1000 switching cycles	
Extreme	After every 2,5 operating years or After every 500 switching cycles	

The examples given below for extreme ambient conditions are based on our experience:

- Climate (tropical, arctic)
- Heavy contamination (dust, salt, rust, sulphur)

The repair operations require the use of following special tools and materials in addition to the standard tools:

- Brass-wire brush for treatment of copper surfaces
- Steel-wire brush for treatment of aluminium surfaces
- Steel-wire brush for treatment of zinc surfaces
- Contact grease Mobilgrease 28
- Cold cleaning agent for silver-faced surfaces
- Lint-free cloths

Unless these service instructions specify special values for torques, the standard values given in table below shall apply.

Thread	**Torques in Nm**		
	Steel, galvanised	**Steel, rustproof**	**Thread in aluminium**
Strength	8.8	A2-70, A4-70	-
M6	-	7	5,5
M8	-	16	14
M10	42	33	26
M12	72	56	45
M16	140	122	100
M16 (stud-bolts of rotary pedestal)	174	-	-

11.1 Treatment of contact surfaces and Intersection Surfaces

Bolted or sliding contact surfaces that conduct current have an effect on the electrical resistance of the current path. Dirty or oxidised contact surfaces increase the electrical resistance. This result in irreparable damage to equipment

The following regulations must be observed:

Aluminium (bolted)

1. Grease lightly
2. Using a steel-wire brush, remove oxide film until surface is mat grey in appearance (do not use emery paper)
3. Wipe off contaminated grease immediately using a lint-free cloth
4. Grease immediately (thin layer)
5. Bolt together treated surfaces and grease joints

Silver-faced contact surfaces (bolted)

1. Clean with cold cleaning agent (do not destroy silver surface)
2. Grease immediately (thin layer)
3. Bolt together treated surfaces and grease joints

Galvanised contact surfaces (bolded)

1. Clean using brass-wire brush
2. Grease immediately (thin layer)
3. Bolt together treated surfaces and grease joints

Copper (bolted)

1. Clean using brass-wire brush
2. Grease immediately (approx. 1 mm)
3. Bolt together treated surfaces and grease joints
4. (If copper is bolted to aluminium, place copper-plated aluminium sheet between the surfaces, ensuring that the sheet is the following way round: (Cu-Cu, Al.-Al.)

Silver-faced contact surfaces (sliding)

1. Clean using cleaning agent (do not destroy silver surface)
2. Grease (approx. 1 mm)
   (if disconnector is equipped with AgC lubrication-free contact, greasing is not necessary)

Copper (sliding)

1. Clean using brass-wire brush
2. Grease immediately (approx. 1 mm)

Steel parts (intersection surfaces)

1. Coat with cold zinc

11.2 Maintenance - Disconnector

The five safety rules:

1. Disconnection
2. Safeguard against reconnection
3. Establish potential isolation
4. Earth and short-circuit
5. Cover or partitions off adjacent, live parts

Operation steps:

1. Observe safety rules for work on high-voltage equipment and take suitable measures (including the five safety rules)
2. Switch off electrical power supplies and control voltages and safeguard against reconnection
3. Clean contact fingers (66) and contact pieces (67) ; check for irreparable damage to silver layer and, if necessary, replace (Fig. 35)
4. Grease contact fingers (66) and contact pieces (67)
   (if disconnector is equipped with AgC lubrication-free contact greasing is not necessary)
5. Clean support insulators; check for damage and, if necessary, replace
6. Check maintenance-free rod ends and supporting points of all operation linkages and coupling rods
7. Check all bolt connections for security
8. Carry out some test operations manually (our recommendation: Three test operations)
9. Reconnect electrical power supplies and control voltages
10. Carry out some test operations using the motor-operated mechanism (our recommendation: Three test operations)
11. The maintenance of the operating mechanism for the disconnector should be carried out according to the maintenance instructions separately supplied for the operating mechanism
12. In case of earthing switch: *Next step : Maintenance of Earthing Switch*

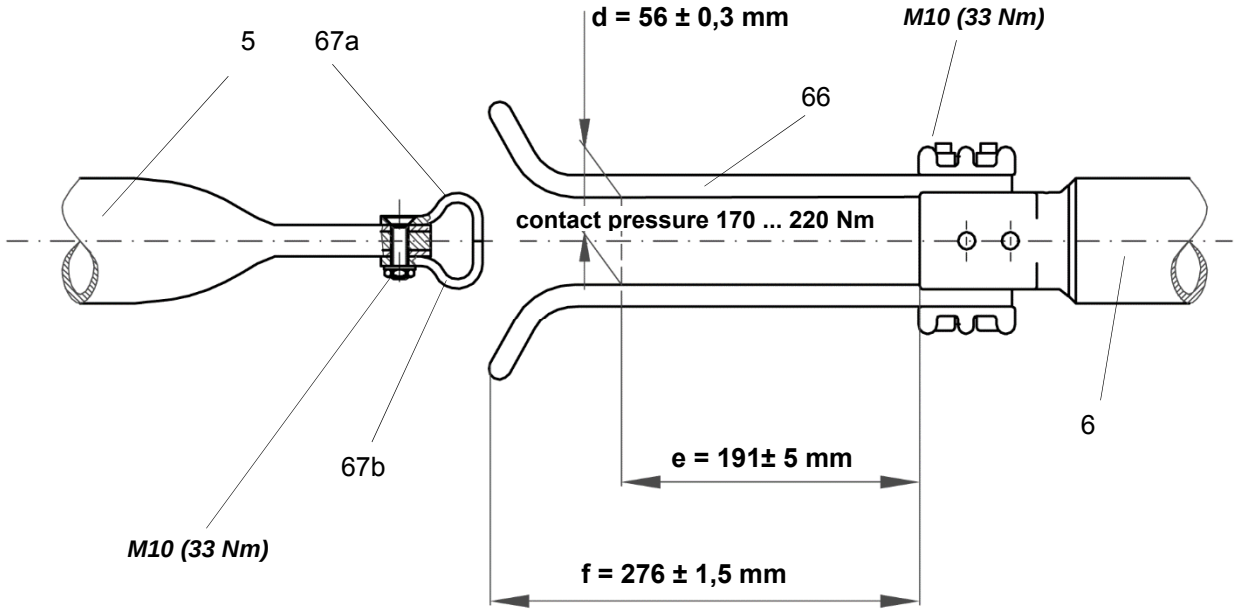

Figure 35 Maintenance of disconnector: Replacement of contact fingers (66) and contact pieces (67)

11.3 Earthing Switch

Operation steps:

1. Observe safety rules for work on high-voltage equipment and take suitable measures (including the five safety rules)
2. Switch off electrical power supplies and control voltages and safeguard against reconnection
3. Clean earthing contacts (18) and contact fingers (20) (Fig. 36; 37; 38) check for erosion in area of silver layer >0,5 mm and, if necessary, replace
4. Grease earthing contacts (18) and contact fingers (20)
   (if disconnector is equipped with AgC lubrication-free contact greasing is not necessary)
5. Check for damage to earthing connections between earthing switch and disconnector base and, if necessary replace
6. Check maintenance-free rod ends and supporting points of all operation linkages and coupling rods
7. Check all bolt connections for security
8. Carry out some test operations manually (our recommendation: Three test operations)
9. Reconnect electrical power supplies and control voltages
10. Carry out some test operations using the motor-operated mechanism (our recommendation: Three test operations)
11. The maintenance of the operating mechanism for the disconnector should be carried out according to the maintenance instructions separately supplied for the operating mechanism

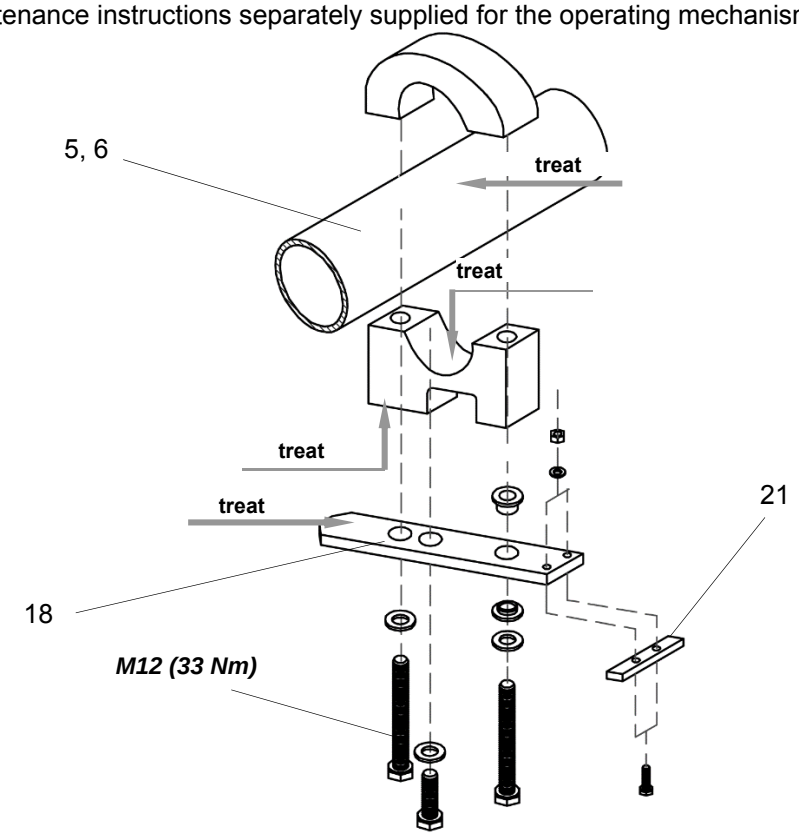

Figure 36 Maintenance of earthing switch: Replacement of earthing contact (18) ≤ 100kA

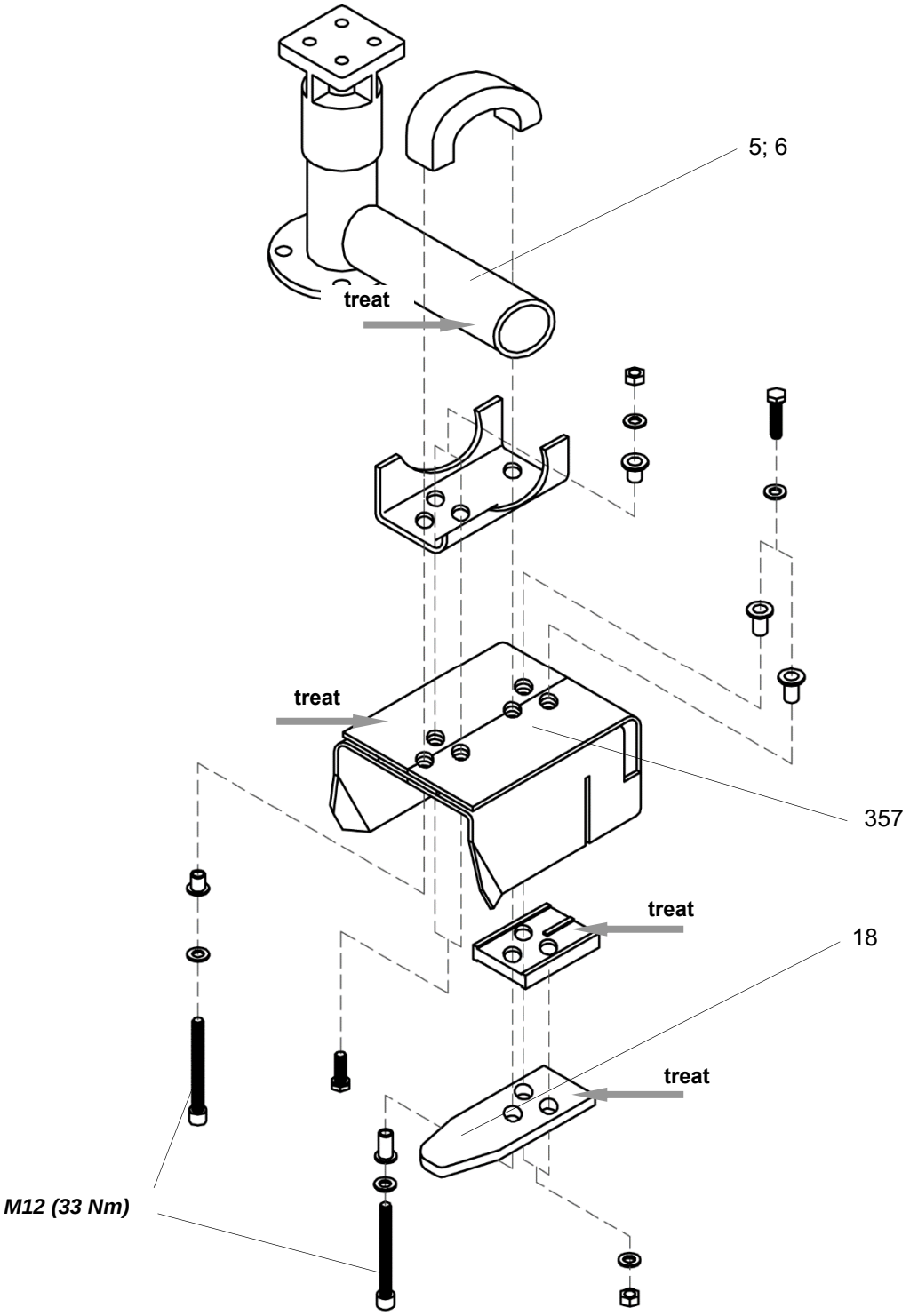

Figure 37 Maintenance of earthing switch: Replacement of earthing contact (18) ≤ 125kA

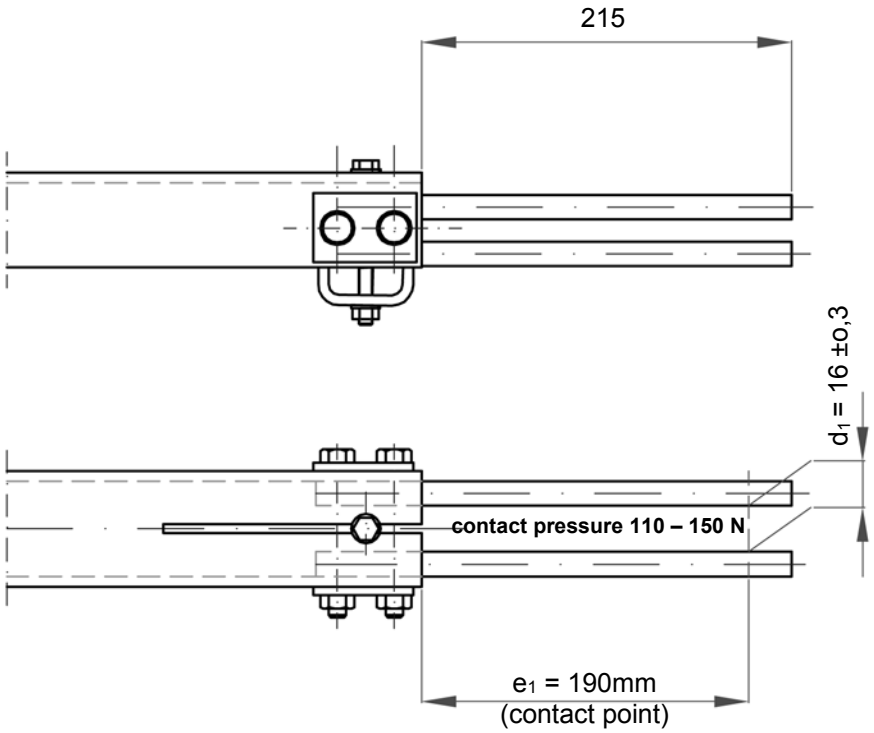

for peak withstand current ≤100kA

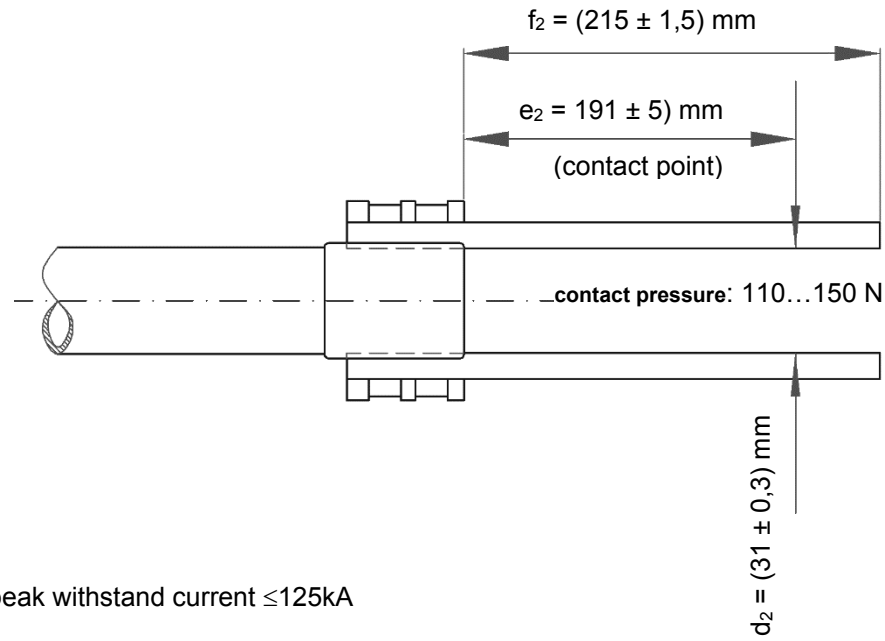

for peak withstand current ≤125kA

Figure 38 Maintenance of earthing switch: Contact finger dimensions

12. Spare parts

9.1 Order information

We advise you contact to keep a stock of the following spare parts for your version of disconnector, This will enable you, should the need arise, to the re-commissioning your disconnector quickly.

You can order or re-order the spare parts at any time. Please send your order to the address given on cover page.

To ensure the speedy processing of your order, we require the following information from you:

Type and order number of the disconnector and of the operating mechanism as shown on the rating plate.

Destination of spare part, item number and order number from chapter 6.1

The type and order number of your disconnector can be found on the rating plate on the disconnector.

List of spare parts for type SGF two-column rotary disconnector

Designation of spare parts	**Qty.**	**Item No.**	**Order number**	
			standard design	**lubrication free (AgC20)**
Contact piece (left)	1	67	2GKS400053 P0007	2GKS400053 P0017
Contact piece (right)	1	67	2GKS400053 P0008	2GKS400053 P0018
Contact finger				
- 1600 A	4	66	GPDT 06 1028 P0001	GPDT 06 1028 P0005
- 2500 A	6	66	GPDT 06 1028 P0001	GPDT 06 1028 P0005
- 3150 A	10	66	GPDT 06 1028 P0001	GPDT 06 1028 P0005
- 4000 A	12	66	GPDT 06 1028 P0001	GPDT 06 1028 P0005
Grease Mobilgrease28				
- 450 g box	-	580	ZPL 0243001 P0020	ZPL 0243001 P0020

List of spare parts for earthing switch

Designation of spare parts	**Qty.**	**Item No.**	**Order number**	
			standard design	**lubrication free (AgC20)**
Earthing contact				
- ≤ 100 kA	1	18	GPDT061118 P0003	GPDT061118 P0005
- ≤ 125 kA	1	18	GPDT064037 P0001	1HPL340388P001
Contact finger				
- ≤ 100 kA	6	20	GPDT061028 P0310	GPDT 061028 P0030
- ≤ 125 kA	6	20	GPDT061028 P0021	GPDT061028 P0025
Earthing connection				
- earthing switch: ≤40 kA, 1 s	1	79	GPDT064019 P0102	GPDT064019 P0102
- earthing switch: >40 kA, 1 s	2	79	GPDT064019 P0102	GPDT064019 P0102
Grease Mobilgrease 28				
- 450 g box	-	580	ZPL 024 3001 P0020	ZPL 024 3001 P0020

13. Lists of Item Numbers

No.	Description	Remarks
1	Foundation, supporting structure, support	On site
2	Disconnector base	-
3	Connecting lever	Coupling of disconnectors
5	Contact-side current path	-
6	Finger-side current path	-
11	Catching hook	Contact-finger holder
13	Stud bolt	Rotary pedestal (70)
15	Coupling rod	Disconnector, earthing switch, series arrangement
17	High-voltage terminal	Rotary head (284)
18	Earthing contact	Current path (5, 6)
19	Earthing-switch lever	Earthing-switch shaft (73)
20	Contact finger	Earthing switch
21	Stop	Earthing contact (18)
23	Tubular contact arm	Earthing switch
26	Interlocking hook	Finger-side current path (6)
27	Interlocking bolt	Contact-side current path (5)
36	Motor-operated mechanism	-
37	Operating rod	Disconnector
39	Emergency hand crank	Motor-operated mechanism
42	Pivot bearing	Separate mounting of operating mechanism
43	Operating shaft	Separate mounting of operating mechanism
55	Manual operating mechanism	-
66	Contact finger	Finger-side current path (6)
67	Contact piece	Contact-side current path (5)
68	Diagonal rod	Disconnector base (2)
69	Disconnector operating lever for operating mechanism	Disconnector base (2)
70	Rotary pedestal	Disconnector base (2)
71	Operating rod	Earthing switch
73	Earthing switch shaft with Earthing-switch lever (339)	Earthing switch, series arrangement
74	Operating lever	Operating mechanism for disconnector (75)
75	Operating mechanism for disconnector	-
76	Operating lever	Operating mechanism for earthing switch (77)
77	Operating mechanism for earthing switch	-
79	Earthing connection	Earthing switch
81	Fixing bolt	Contact finger holder, current path (6)
87	Corona-protection fittings	Only for rated voltages = 300 kV
101	Fixing bolt	Current path (5, 6)
152	Clamp sleeve 13 x70	Operating rod (83)
153	Treaded pin M10 x20	Collared bush (390)
201	Support insulator	-
221	Base frame	Disconnector base (2)
228	Earthing switch	-
284	Rotary head	Current path (5, 6)
327	Transportation angle	Base frame (221)
328	Positioning angle	Base frame (221)

No.	Description	Remarks
329	U-type clamp	Contact arm (23)
330	Thrust bearing	Earthing-switch link, earthing-switch shaft (73)
331	Collared bush	Earthing-switch link, earthing-switch shaft (73)
332	Spacer	Earthing connection (79)
334	U-clamp (clamping cover)	Operating lever (74, 76), earthing-switch lever (19), separate mounting of operating mechanism
335	Coupling piece	Operating shaft (43), separate mounting of operating mechanism
336	Earthing-switch link	Earthing switch (228)
336a	Base frame of earthing switch	Mounted on base frame where the operated mechanism for earthing switch is fixed, for single pole version and in series arrangement
337	Earthing-switch shaft	Earthing switch, parallel arrangement
338	Lock nut	Coupling rod (15), operating rod (74, 76)
339	Earthing-switch lever	Earthing-switch shaft (73)
340	Fixing bolt	U-type clamp (329), contact arm (23)
341	Fixing bolt	Contact piece (67), current path (5)
343	Coupling piece	Earthing-switch shaft (337), pole distance P > 2500 mm
343	Earthing connection for 2 earthing switch	Earthing switch
349	Interlocking segment	Earthing-switch shaft (73, 337)
350	Interlocking lever, finger side	Rotary pedestal (70)
351	Interlocking lever, contact side	Rotary pedestal (70)
360	Support for earthing switch contact arm	Earthing switch
365	Coupling piece	Disconnector coupling
367	Manual operated mechanism lever	Manual operated mechanism (55)
387	Operating rod, slotted	Separate mounting, measurement m3 = 6…12 m
388	Driving plate	Separate mounting, measurement m3 = 6…12 m
389	Thrust bearing	Separate mounting, measurement m3 = 6…12 m
390	Collared bush	Separate mounting, measurement m3 = 6…12 m
580	Bundle of grease	Treatment of contact fingers (66, 20)

14. List of figures

Figure 1 General main dimensions of type SGF two column rotary disconnector 5
Figure 2 Minimum distance P_{min} between poles of disconnector 6
Figure 3 Disconnector type SGF with build on earthing switch type TEC....7
Figure 4 Shipping of disconnector base if mounting on support structure 10
Figure 5 Shipping of premounted disconnector pole if mounting in front of supporting structure....11
Figure 6 Mounting of insulators and current paths....12
Figure 7 Preparing the disconnector pole for mounting 13
Figure 8 Mounting operating mechanism for disconnector direct mounting 14
Figure 9 Mounting operating mechanism for disconnector, separate mounting: Measurement m3 < 6m....16
Figure 10 Mounting operating mechanism for disconnector, separate: Measurement m3....17
Figure 11 Mounting operating mechanism for disconnector, wall mounting 18
Figure 12 Mounting of coupling of disconnectors: Disconnector poles in parallel 20
Figure 13 Mounting of coupling of disconnectors: Disconnector poles in series 20
Figure 14 Mounting of coupling of disconnectors: Disconnector SGF72.5 - poles in parallel....21
Figure 15 Adjustment of operating mechanism for disconnector....22
Figure 16 Adjustment of operating mechanism for disconnector....23
Figure 17 Disconnector main contacts, engagement....24
Figure 18 Mounting of operating mechanism for earthing switch -direct mounting 25
Figure 19 Mounting of earthing switch link, earthing switch poles in parallel, :....28
Figure 20 Mounting of earthing switch, earthing-switch poles in parallel....29
Figure 21 Mounting of earthing switch in parallel if disconnector delivered as complete poles....29
Figure 22 Mounting of operating mechanism: Wall mounting 30
Figure 23 Mounting of coupling piece (342, 334) for connection of earthing-switch shafts (337)....31
Figure 24 Mounting of earthing connections (79, 343) for peak-withstand current ≤ 100kA....31
Figure 25 Mounting of earthing connections (79, 343) for peak-withstand current ≤ 125kA....32
Figure 26 Mounting of earthing switch, earthing switch poles in series 34
Figure 27 rthing switch poles in series: Mounting of coupling rods (15) 34
Figure 28 Adjustment measurements for earthing-switch shaft (73) and earthing switch lever (339)....35
Figure 29 Adjustment of operating mechanism for earthing switch -earthing switch on contact side 36
Figure 30 Adjustment of operating mechanism for earthing switch -earthing switch on finger side 37
Figure 31 Earthing contact (18), adjusting measurements 38
Figure 32 Mechanical interlocking segment....39
Figure 33 Mounting mechanical interlocking....40
Figure 34 Mounting of end position interlocking plate....41
Figure 35 Maintenance of disconnector: Replacement of contact fingers (66) and contact pieces (67)....46
Figure 36 Maintenance of earthing switch: Replacement of earthing contact (18) ≤ 100kA....47
Figure 37 Maintenance of earthing switch: Replacement of earthing contact (18) ≤ 125kA....48
Figure 38 Maintenance of earthing switch: Contact finger dimensions....49

HAPAM Poland Sp. z o.o.
ul. ks. bp. W Tymienieckiego 22/24
90-349 Łódź, POLSKA
Tel. +48 42 663 54 50
Fax. +48 42 663 54 97
www.hapam.pl