Service Instruction

Earthing Switch
type TEC 72,5 - 300

Rated Voltages	72,5 ... 300 kV
Rated peak-withstand current:	100 ... 125 kA

No. 1HPL 500 629e E

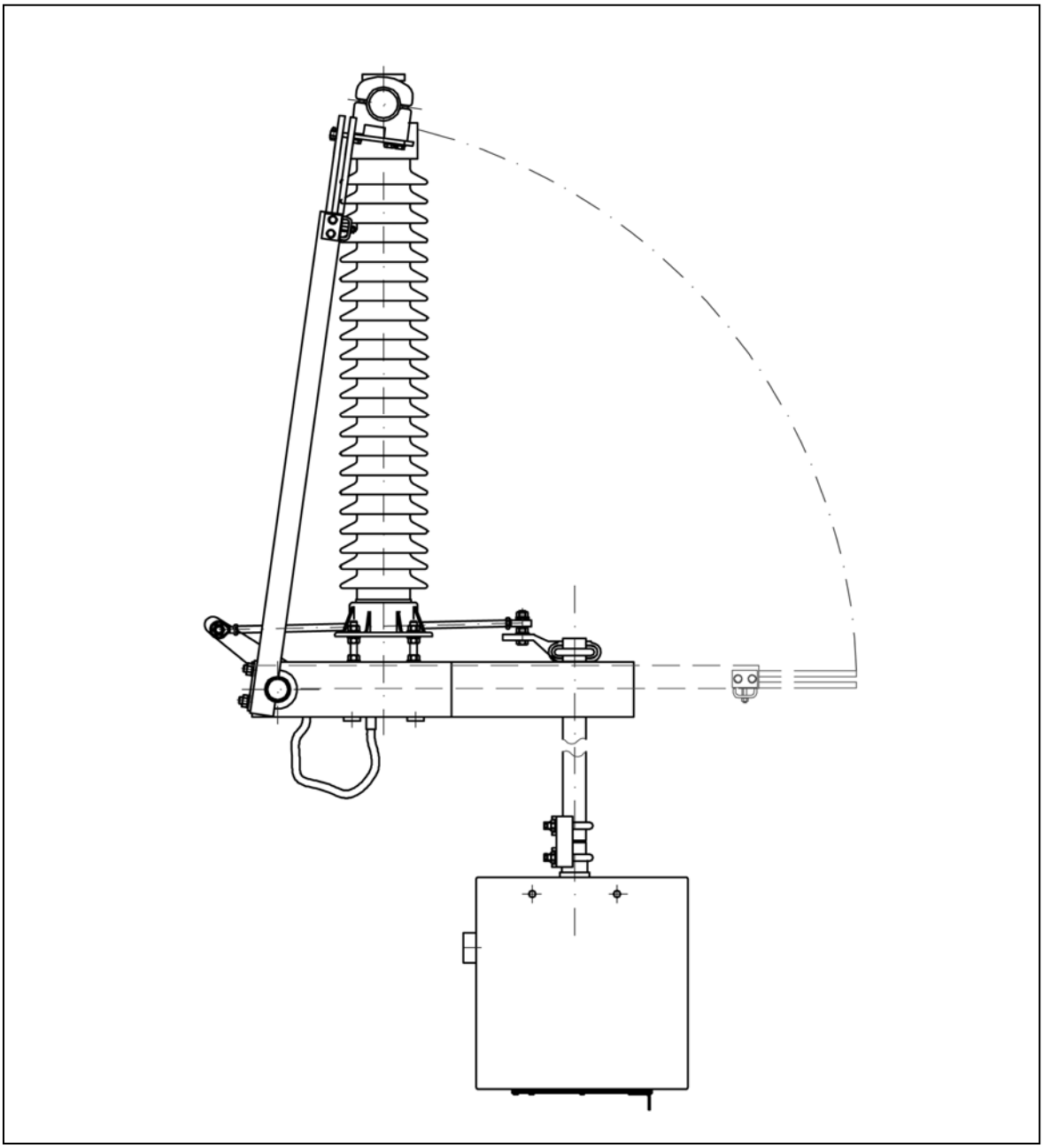

HAPAM

Contens:

1. General ... 3
2. Function ... 3
2.1 Variants ... 3
2.2 Parallel Arrangement of Disconnector Poles ... 4
2.3 Series Arrangement of Disconnector Poles ... 4
3. Technical Data ... 5
3.4 Electrical data ... 5
3.5 General Mechanical Data ... 5
3.6 Main dimensions and weights ... 6
4. Design and Mode of Operation ... 7
5. Shipping, transport and storage ... 8
5.1 Scope of Supply ... 8
5.2 Shipping ... 8
5.3 Storage ... 9
6. Mounting of earthing switch ... 9
6.1 Mounting of earthing switch in parallel arrangement ... 9
6.2 Earthing Switch poles in Series and Mounting on Individual Pole ... 14
6.3 Mounting of Operating Mechanism for Earthing Switch ... 19
6.3.1 Direct mounting ... 19
6.3.2 Separate Mounting ... 20
7. Commissioning and De-commissioning ... 26
7.1 Commissioning of Earthing Switch ... 26
7.2 De-commissioning ... 26
8. Maintenance ... 27
8.1 Treatment of contact surfaces and Intersection ... 28
8.2 Operation steps: ... 29
9. Spare parts ... 32
9.1 Order information ... 32
9.2 List of spare parts ... 32
10. Lists of Item Numbers ... 33

1. General

These service instructions have been carefully written and are intended to enable the safe and reliable operation of our products. However, if you find any discrepancies in these service instructions or you think they require some amendments or changes, please let us know.

If these service instructions are followed, this will, on the basis of our experience, guarantee the safe and reliable operation of our products.

Please contact us or our nearest representative if the safe and reliable operation of our products is no longer guaranteed because of incorrect or missing information. Our address and fax no. are given on the cover page.

We accept no responsibility whatsoever regarding any direct or indirect damage or loss arising through the incorrect use of our products.

We reserve all rights in respect of this document and the product represented therein. The contents of this document may not without our positive consent be reproduced, notified to third parties or otherwise used.

© HAPAM Poland Sp. z o.o. 2009

2. Function

Earthing switches are used for earthing and short-circuiting disconnected sections of substation or plant.

They are designed for no-load switching and are able to disconnect low charging currents. Earthing switches type TEC are suitable for outdoor installations and can be supplied as the single-column free-standing earthing switch or as earthing switch built-on.

The type TEC earthing switches conforms to the following standards:

- IEC 62 271-102; 2003
- IEC 62 271-1; 2007
- PN-EN-62 271-102; 2005

2.1 Variants

The type TEC earthing switch is available in wide range of variants. These service instructions are valid for standard variants. In case of special solutions use additional documentation (dimension drawings made especially for the project).

The earthing switch of 2- or 3-pole group can be arranged in parallel or series. The pole and side for mounting of operating mechanism can be specified when ordering.

The side for mounting the operating mechanism is finalised with order. Later changes are possible with co-operation with HAPAM erection specialists

2.2 Parallel Arrangement of Disconnector Poles

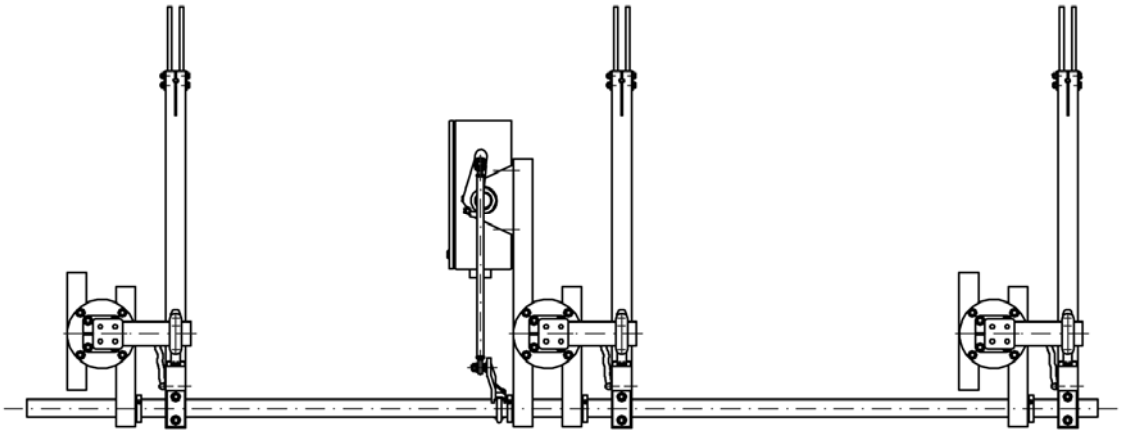

Figure 1: 3-pole type TEC earthing switch in parallel arrangement (basic design)

2.3 Series Arrangement of Disconnector Poles

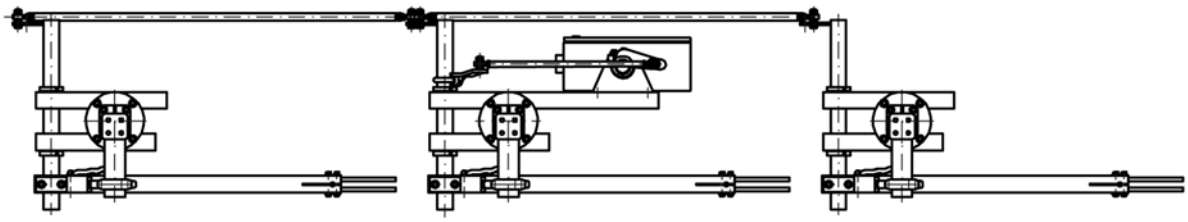

Figure 2: 3-pole type TEC earthing switch in series arrangement (basic design)

3. Technical Data

3.4 Electrical data

Rated voltage	**kV**	**72,5**	**123**	**145**	**170**	**245**	**300**
Rated peak-withstand current	kA	100 / 125	100 / 125	100 / 125	100 / 125	100 / 125	100 / 125
Rated short-time current (1-3 sec)	kA	40 / 50	40 / 50	40 / 50	40 / 50	40 / 50	40 / 50
Rated power frequency voltage (50 Hz, 1min) - against earth and between poles	kV	140	230	275	325	460	380
Rated lighting-impulse-withstand voltage 250/2500µs - against earth and between poles	kV	325	550	650	750	1050	1050
Rated switching-impulse-withstand voltage 1,2/50µs - against earth and between poles	kV	-	-	-	-	-	850
3-phese switching capacity inductive, capacitive	A		2	2	2	1,5	1,5

3.5 General Mechanical Data

Ogólne parametry mechaniczne uziemnika typu TEC (dane podstawowe)

Minimum breaking load of support insulators	**N**	**4000**	**6000**	**8000**
Permissible mechanical terminal load – Static and dynamic – Static portion	 N N	 3000 1500	 4500 2500	 6000 3000

3.6 Main dimensions and weights

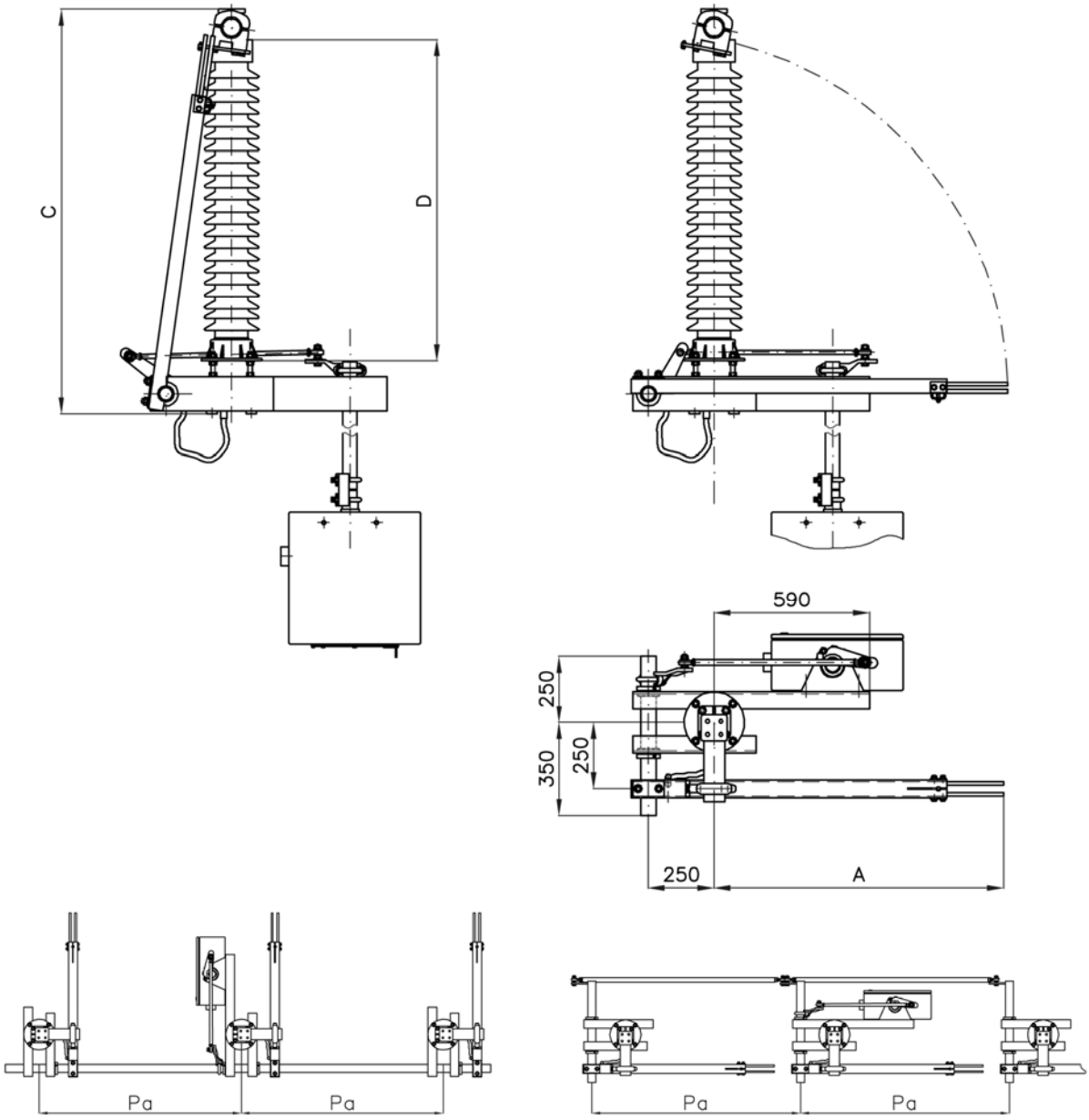

Figure 3: General main dimensions of type TEC earthing switch (standard values)

	Dimensions	kV	72.5	123	145	170	245	300
A	Earthing switch arm (OPEN)	mm	665	1105	1380	1575	2175	2520
C	Height of earthing switch	mm	1085	1535	1815	2015	2615	2965
D	Height of post insulator	mm	770	1220	1500	1700	2300	2650
Pa	Pole distance (minimum)							
	- parallel arrangement	mm	1055	1525	1725	2925	2525	2875
	- series arrangement	mm	1130	1570	1850	2100	2270	2700
	Weights							
	Earthing switch 3-pole group with insulators and operating mechanisms	kg	220	325	355	430	625	655

4. Design and Mode of Operation

The carrying constructional element of the single column free-standing earthing switch is the sectional base frame. The post insulator is assembled on the mounting plate and supports the contact with high-voltage terminal acc to DIN or NEMA standard.

The earthing switch arm is permanently connected with the earthed frame (2) by means of a flexible connection (79). In open position the tubular contact arm (23) is located along the base frame.

earthing switch arm is manufactured as follow:

- aluminium channel bar for peak-withstand current ≤ 100 kA
- tubular aluminium profile for peak-withstand current ≤ 125 kA

All components are protected against atmospheric influences; the steel parts liable to rusting are hot dip galvanised

Each three-pole earthing switch group requires only one manual or motor operating mechanism (77).

The operating mechanisms are fastened laterally to the base frame . For units installed on a higher level it is possible to mount the operating mechanism within reach from the ground level by using the additional pivot bearing and the operating shaft (43) [Fig. 4].

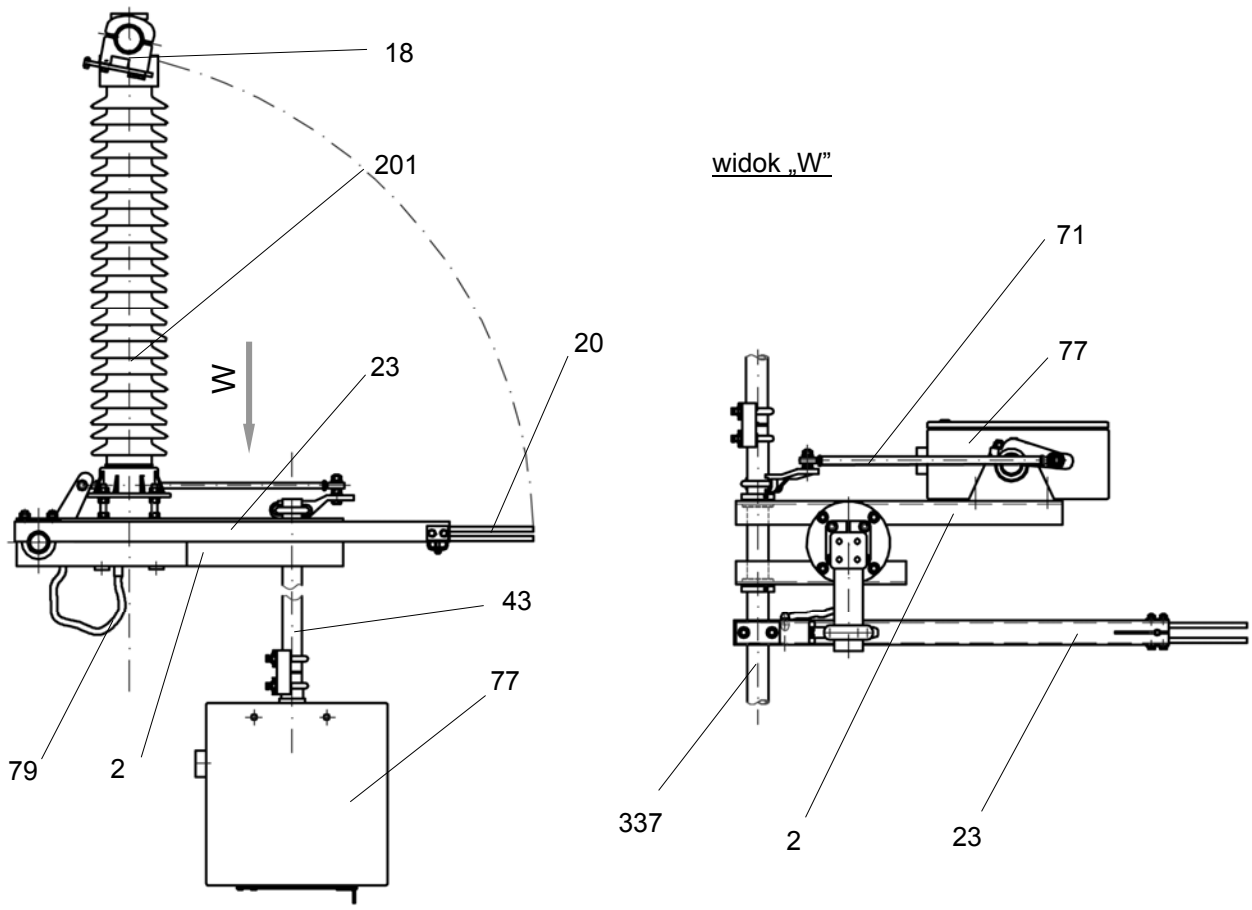

Figure 4: Earthing switch type TEC

5. Shipping, transport and storage

The equipment is shipped on pallets (Poland) preassembled in sub or in boxes (outside Poland). Earthing switches are preliminary mounted in individual sub-assemblies.

The scope of supply does not include fixing materials for mounting the earthing switch on the supporting structures.

After unpacking, check all supplied equipment immediately for shipping damage. Report shipping damage without delay to the forwarding agency

5.1 Scope of Supply

Earthing switch is supplied in components:

Name of part or sub-assembly	Pos.	remarks
Contact support	1	with HV terminal
Base frame	2	
Contact arms	23	with contact finger (20)
Earthing contact	18	
Operating rod	71	
Operating lever	76	
Earthing-switch links	79	double (343)
Operating shaft	337	
Earthing-switch shafts (73) with welded earthing-switch lever (339)	73	in case of series arrangement
Earthing-switch lever	19	
Coupling rods	15	in case of series arrangement
Operating mechanism	77	motor or hand
Small parts	-	

5.2 Shipping

The equipment is shipped on pallets or in boxes (for far distances from Poland). Earthing switches are preliminary mounted in individual sub-assemblies.

Caution: After unpacking, check all supplied equipment immediately for shipping damage. Report shipping damage without delay to the forwarding agency

5.3 Storage

In case of inappropriate storage of the individual components, there is the risk of ingress of water. For this reason, earthing switch parts and operating mechanisms must always be stored in mounting position.

It is advisable to leave all assemblies in shipping packing until the start of mounting in order to protect against contamination and damage.

Operating mechanisms are supplied in special packing. This protects the operating mechanisms against corrosion within a limited time and in a dry atmosphere. It is advisable not to open this packing until just before the start of mounting.

Caution: In case of lengthy storage and/or a damp atmosphere, there may be undesired formation of condensation in the operating mechanisms. If the shipping time and storage time together amount to more than 6 months or if operating mechanisms are stored in a damp atmosphere, the special packing must be removed immediately and the electrical heating of the operating mechanisms must be started. Before doing this, remove bags with desiccative from the operating mechanisms!

6. Mounting of earthing switch

If you suspect shipping damage, check the spacing dimensions of the contact fingers .

The earthing switch pole can mounted either on supporting structure or in front of supporting structure. If mounting in front of the supporting structure, first lift the completely mounted earhing switch pole onto the supporting structure and then align and tighten it there.

Remember, that the materials for fixing the earthing switch bases (2) on the supporting structure are not included in scope of supply.

6.1 Mounting of earthing switch in parallel arrangement

1. Unpack components
2. Using lifting tackle, place earthing switch base (2) on the supporting structure
3. Mount support insulators (201) on the base frame (2) [Fig. 5]
4. If bottom flange of insulator holes equals Ø127mm, mount intermediate plate to insulator first, then mount them on the base frame [Fig. 6]
5. Mount the contact support (1) on the upper flange o insulator (201) and earthing switch contact (18) [Fig. 5 and 6]
6. Grease thrust bearing (330), inside, and collared bush (331), outside, with Mobilgrase28 and mount with collared bush (331), making sure that the thrust bearings are at the specified side [Fig. 5]
7. Mount earthing-switch shaft (337)
8. If pole distances P > 2500 mm: Connect split earthing-switch shaft to coupling piece (342)
9. Tighten locking screw in collared bushes (331) and secure with lock nut
10. Tighten earthing connections (79) [Fig. 13]
    Caution: In case of short circuit current ≤40 kA /3s and 50kA/1-3s double earthing connection is needed (343).
11. Mount operating mechanism –**refer to Chapter 6.3**
12. Set operating mechanism for earthing switch to the ON position
13. Set premounted operating lever (76) to the correct position
14. Mount earthing-switch lever (19) on the earthing-switch shaft
15. Mount operating rod (71) and adjust to the required length

16. With the operating mechanism in the ON position, adjust spacing dimensions for operating lever (76) –**refer to Chapter 6.3**
17. Tighten operating lever (76) and earthing-switch lever (19)
18. Treat contact surface for earthing contact (18) on the current path
19. Treat earthing contact (18) and mount on contact support (1)
    Caution: Do not lose insulating bush (334) and insulating plate (345)
20. Wipe contact finger (20) with cloth and grease
21. Mount tubular contact arms (23) on earthing-switch shaft (337)
22. Set tubular contact arms (23) manually to the ON position until contact fingers (20) are up against stop (21) [Fig. 5; 20]
23. Align contact finger (20) and earthing contact (18) at right angels to each other and tighten earthing contact (18). *Align it by displacing and turning the contact (18) on support tube (1).*
24. Preset distance "l" between rear contact finger (20) and stop (21) of earthing contact (18) (compensation for torsion of earthing-switch shaft) [Fig 20]
    Caution: Earthing switch arm of pole witch operating mechanism should be closing as last one.
25. Tighten screws on the earthing-switch shaft
26. Set earthing switch to the OFF position
27. Shorten operating rod (71) so that, during a manual test operation, all the rear contact fingers are up against the stop in the ON position
28. Check distance between contact finger (20) and stop (21). The distance on one pole of 3-pole group must not be more than 5 mm
29. If necessary, correct the contact of the contact fingers by adjusting operating rod (71) and check by means of test operation
30. Tighten lock nuts (338) on the operating rod (left-, right-hand thread!)
31. Tighten locking screw in the earthing-switch lever (19) and secure with lock nut
32. Set earthing switch to the ON position
33. Loosen nuts (340) on the earthing switch clamp re-tighten, so that contact fingers (20) are uniformly up against earthing contact (18)
34. Treat contact finger (20) and earthing contact (18)
35. For rated voltages 245…300 kV: Mount support (360) for tubular contact arm (23) [Fig. 10]

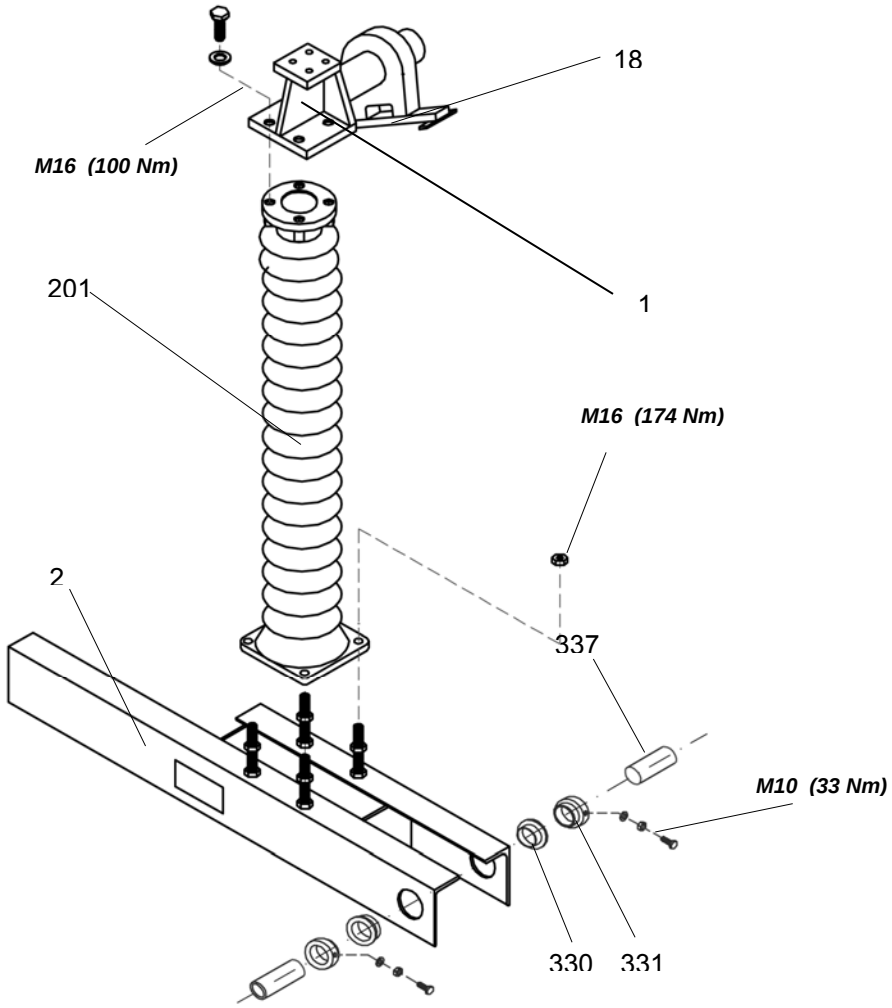

Figure 5: Mounting of post insulator and contact support
(insulators with pitch diameter Ø 200; 225 mm)

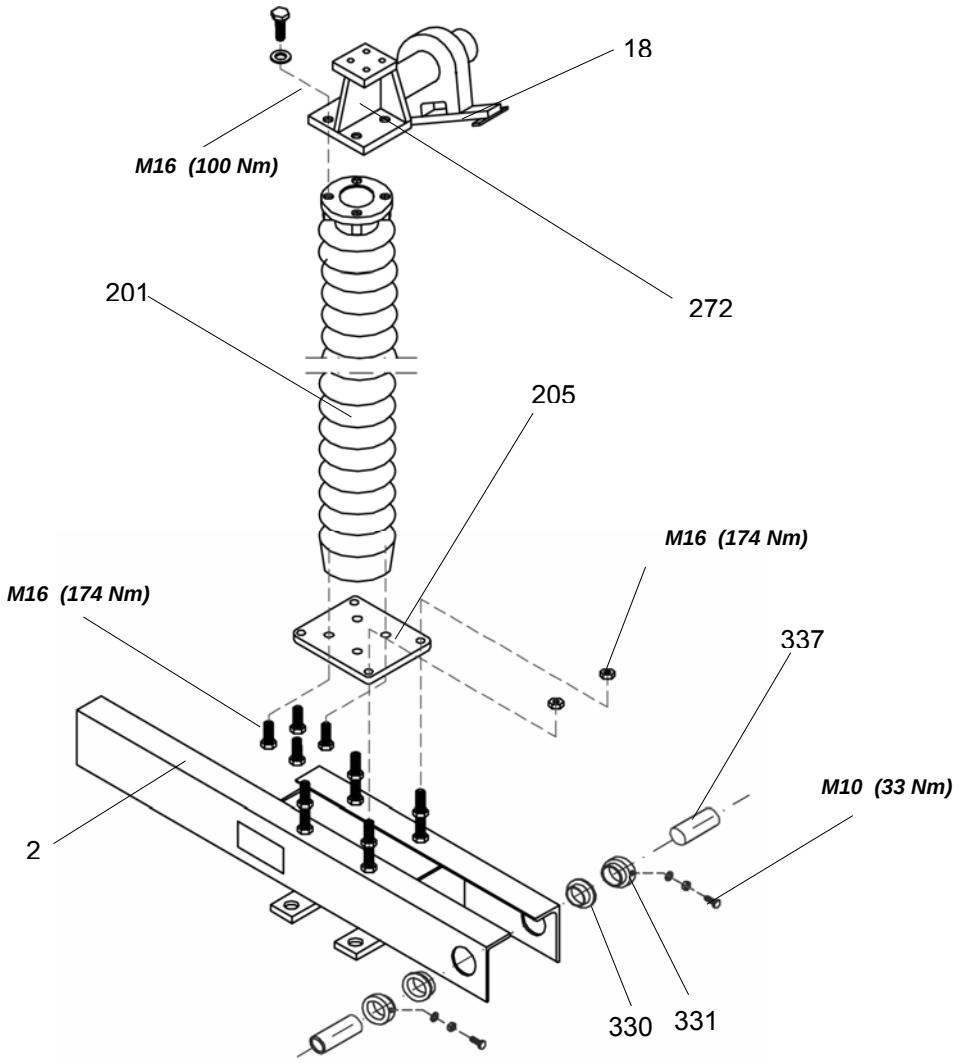

Figure 6: Mounting of post insulator and contact support (insulators with pitch diameter Ø 127 mm)

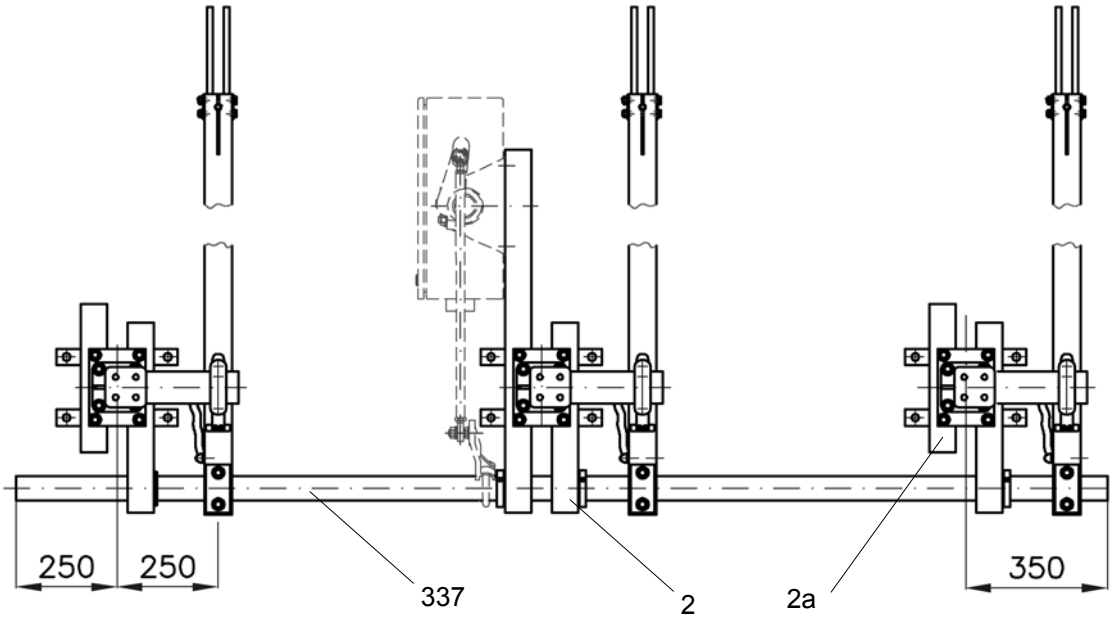

Figure 7: Mounting of earthing switch in parallel arrangement

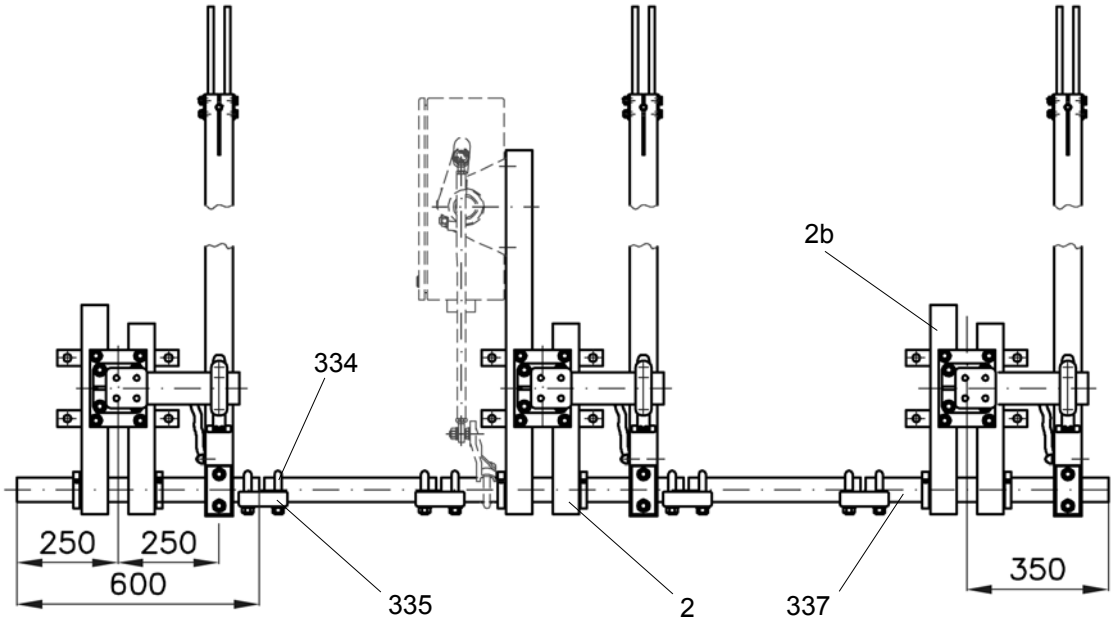

Figure 8: Mounting of earthing switch in parallel arrangement if earthing switch is delivered as complete poles

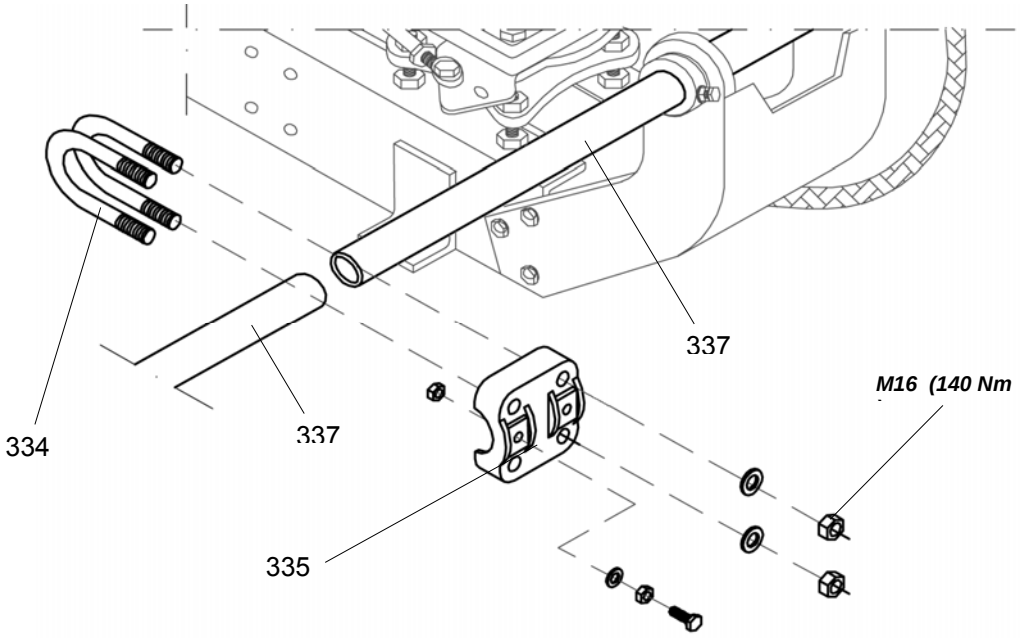

Figure 9: Mounting of coupling piece (334, 335) for connection of earthing-switch shafts (337)

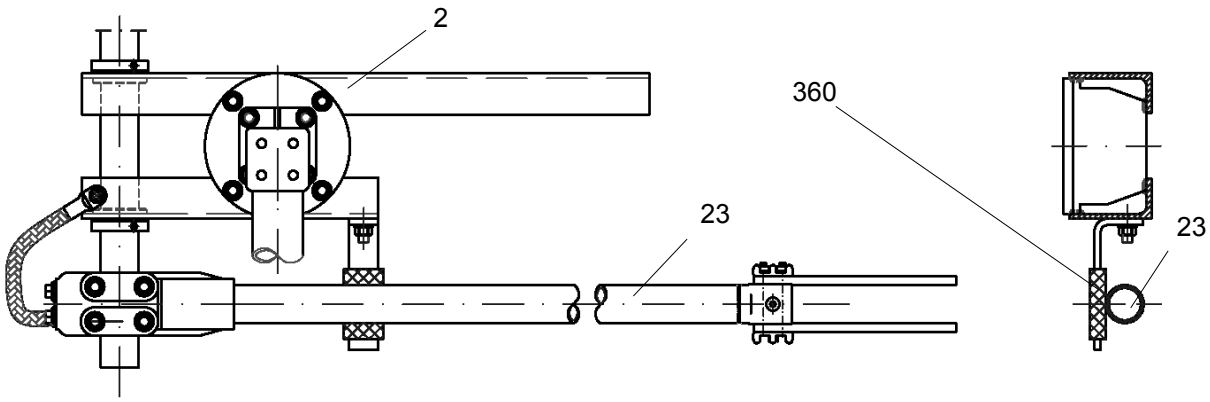

Figure 10: Mounting of support (360) for contact arm (23)
(For rated voltages 245…300 kV only)

6.2 Earthing Switch poles in Series and Mounting on Individual Pole

Make sure that the disconnector poles are in the OFF position before mounting the earthing switches.

1. Unpack components
2. Using lifting tackle, place earthing switch base (2) on the supporting structure
3. Mount support insulators (201) on the base frame (2) [Fig. 5]
4. If bottom flange of insulator holes equals Ø127mm, mount intermediate plate to insulator first, then mount them on the base frame [Fig. 6]
5. Mount the contact support (1) on the upper flange o insulator (201) and earthing switch contact (18) [Fig. 5 and 6]
6. Grease thrust bearing (330), inside, and collared bush (331), outside, with Mobilgrase28 and mount with collared bush (331), making sure that the thrust bearings are at the specified side [Fig. 5 or 6]
7. Mount earthing-switch shafts in individual poles (337)
8. Tighten locking screw in collared bushes (331) and secure with lock nuts
9. Set operating mechanism for earthing switch to ON position
10. Adjust premounted operating lever (76)
11. Mount earthing-switch lever (19) on the earthing-switch shaft
12. Mount operating rod (71) and adjust to the required length
13. With the operating mechanism in the ON position, adjust spacing dimensions for operating lever (76)
14. Tighten operating lever (76) and earthing-switch lever (19)
15. Set earthing-switch lever (339) to position [Fig. 12]
16. Mount coupling rods (15), aligning earthing-switch lever (339) to the required measurement
17. Treat contact surface for earthing contact (18) on the current path

18. Treat earthing contact (18) and mount on current path (5) or (6).
    Caution: Do not lose insulating bush (344) and insulating plate (345)
19. Mount tubular contact arms (323) with T-type clamp (329) on earthing-switch shafts (73)
20. Set contact arms (23) manually to the ON position until contact fingers (20) are up against stop (21)
21. Align contact finger (20) and earthing contact (18) at right angles to each other and tighten earthing contact (18)
22. Preset distance “l” between rear contact finger (20) and stop (21) of earthing contact (18) (compensation for play of coupling rods) [Fig. 20]
    Caution: Earthing switch arm of pole witch operating mechanism should be closing as last one.
23. Tighten clamps on earthing switch arm (329) on the earthing-switch shafts
24. Set contact arms (23) manually to the ON position until contact fingers (20) are up against stop (21)
25. Align contact finger (20) and earthing contact (18) at right angles to each other and tighten earthing contact (18)
26. Set earthing switch to the OFF position
27. Shorten operating rod (71) so that, in case of a manual test operation, all the rear contact fingers are against the stop in the ON position
28. If necessary, correct the contact of all contact finger on the operated pole by adjusting operating rod (71) and check by means of test operation
29. Tighten lock nuts on operating rod (left-, right-hand thread!)
30. Correct the contact of the contact fingers on the coupled poles by adjusting coupling rods (15) and check by means of test operation
31. Check distance between contact finger (20) and stop (21). The distance on one pole group of 3-pole group must not be more than 5 mm
32. Tighten lock nuts on coupling rods (15) (left-, right-hand thread!).
    Caution; This mounting step is not applicable if the earthing switch is mounted on individual disconnector poles
33. Tighten locking screw in earthing-switch lever (19) and secure with lock nut
34. Set earthing switch to the ON position
35. Loosen nuts (340) on the U-type clamps and re-tighten , so that contact fingers (20) are uniformly up against contact (18)
36. Treat contact finger (20) and earthing contact (18)
37. *For rated voltages 245…300 kV*: Mount support (360) for tubular contact arm (23) [Fig. 10]

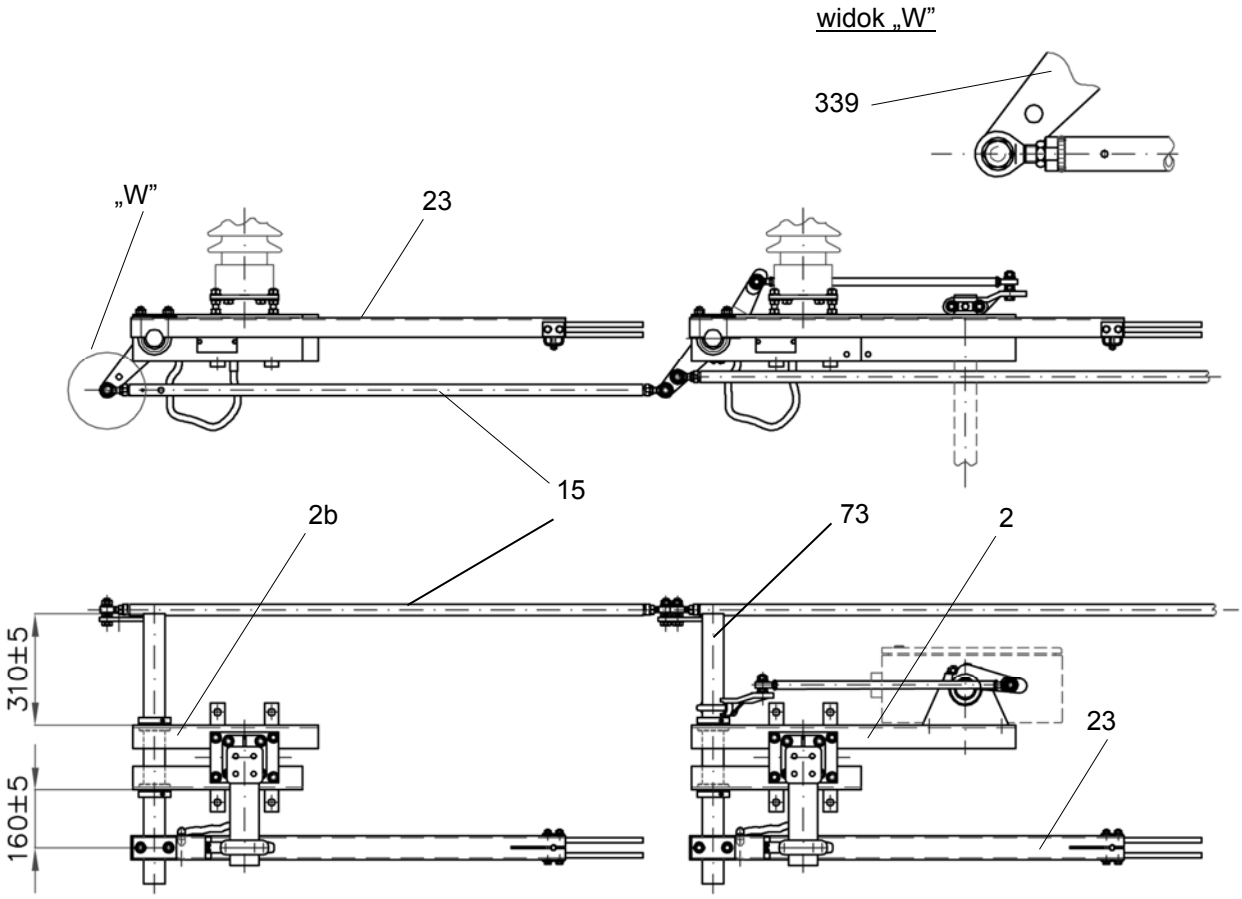

a) operating mechanism separate (below base frame) -levers (339) in down position

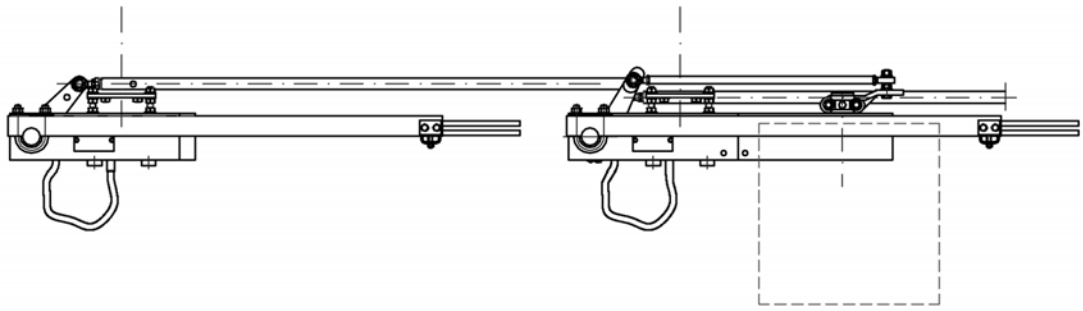

b) operating mechanism direct on base frame -levers (339) in up position

Figure 11: Mounting of earthing switch –poles in series –dimensions

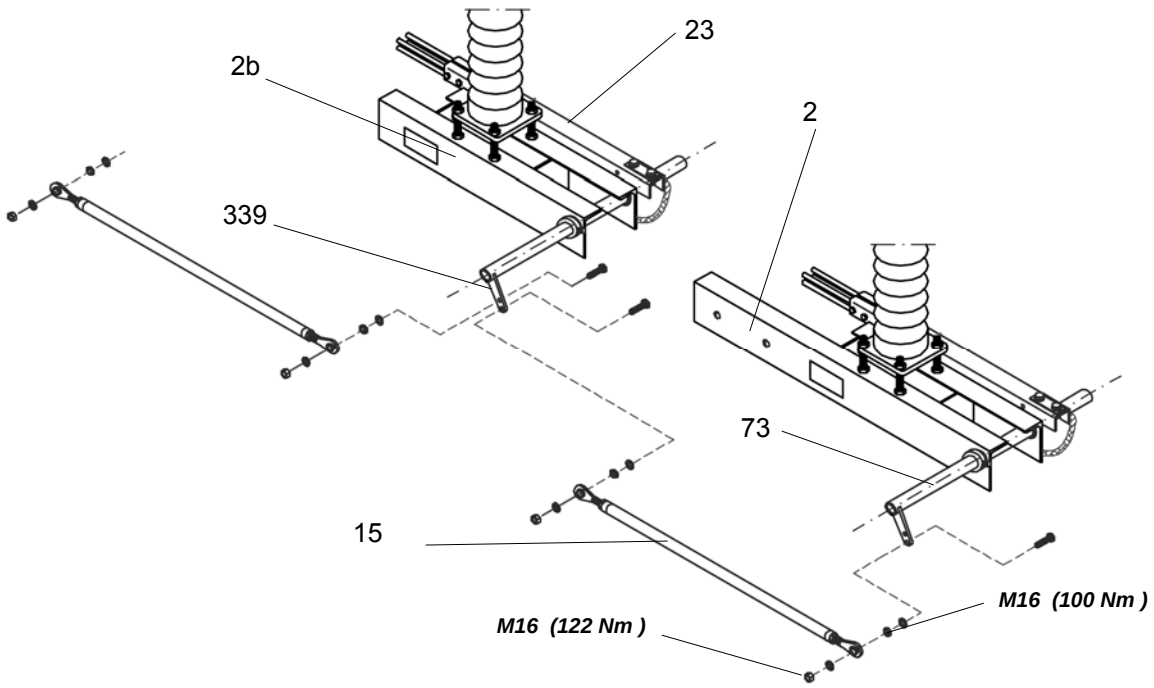

Figure 12: Mounting of earthing switch –poles in series- mounting of coupling rods

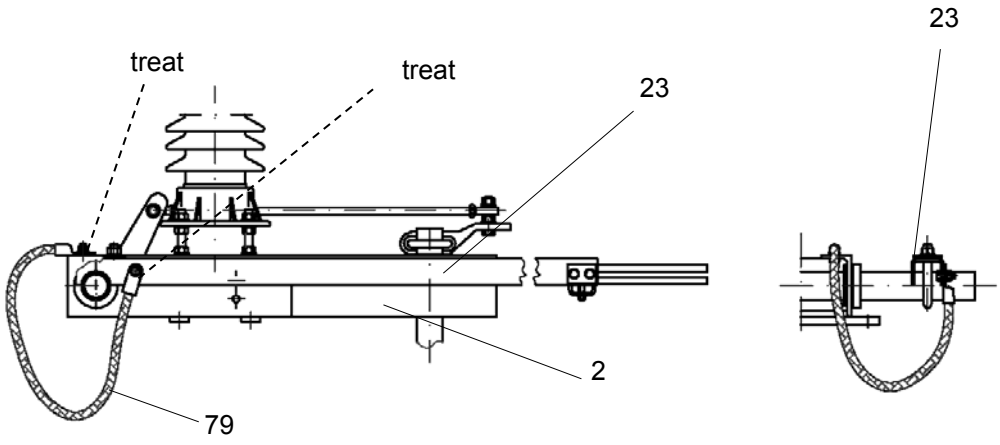

a) for short circuit current ≤ 40kA / 1s

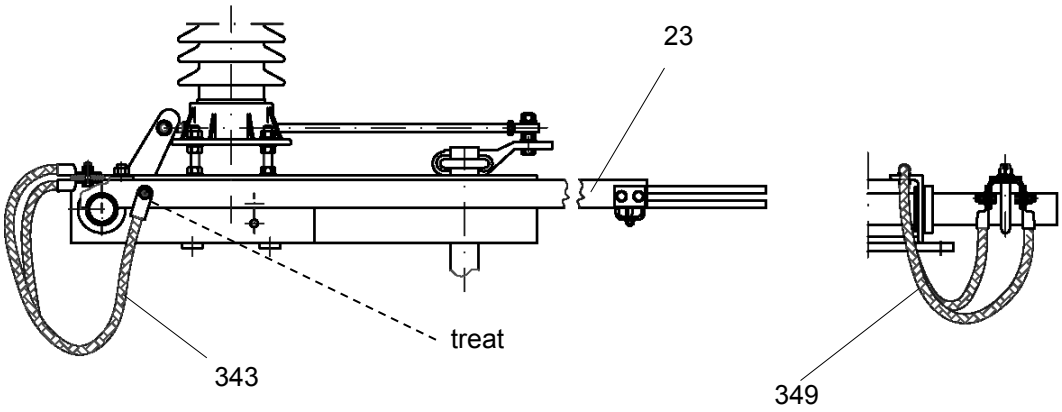

b) for short circuit current ≤ 40kA / 3s

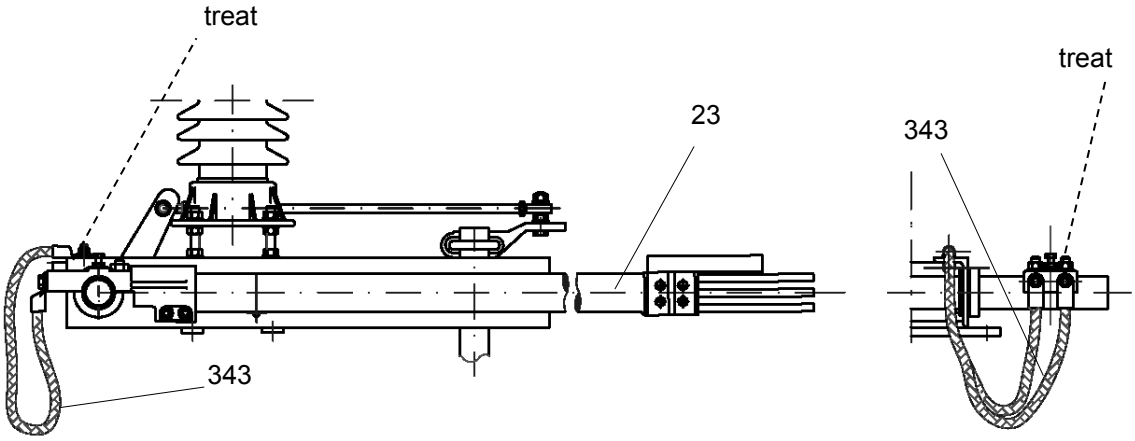

c) for short circuit current ≤ 50kA / 1, 3s

Figure 13: Mounting of earthing connections

6.3 Mounting of Operating Mechanism for Earthing Switch

6.3.1 Direct mounting

Make sure that operating mechanism is in the ON position (as delivered state). If the operating mechanism is in the OFF position, set it to On position using the emergency hand crank (39).

In case of motor-operated mechanism, test operations may be carried out using the emergency hand crank (39). Do not use a drill.

Mounting steps:

1. Unpack operating mechanism (77)
2. Tighten operating mechanism to disconnector base (2)
3. Fit operating lever (76) on the shaft end of the operating mechanism according to mounting side [Fig. 14]

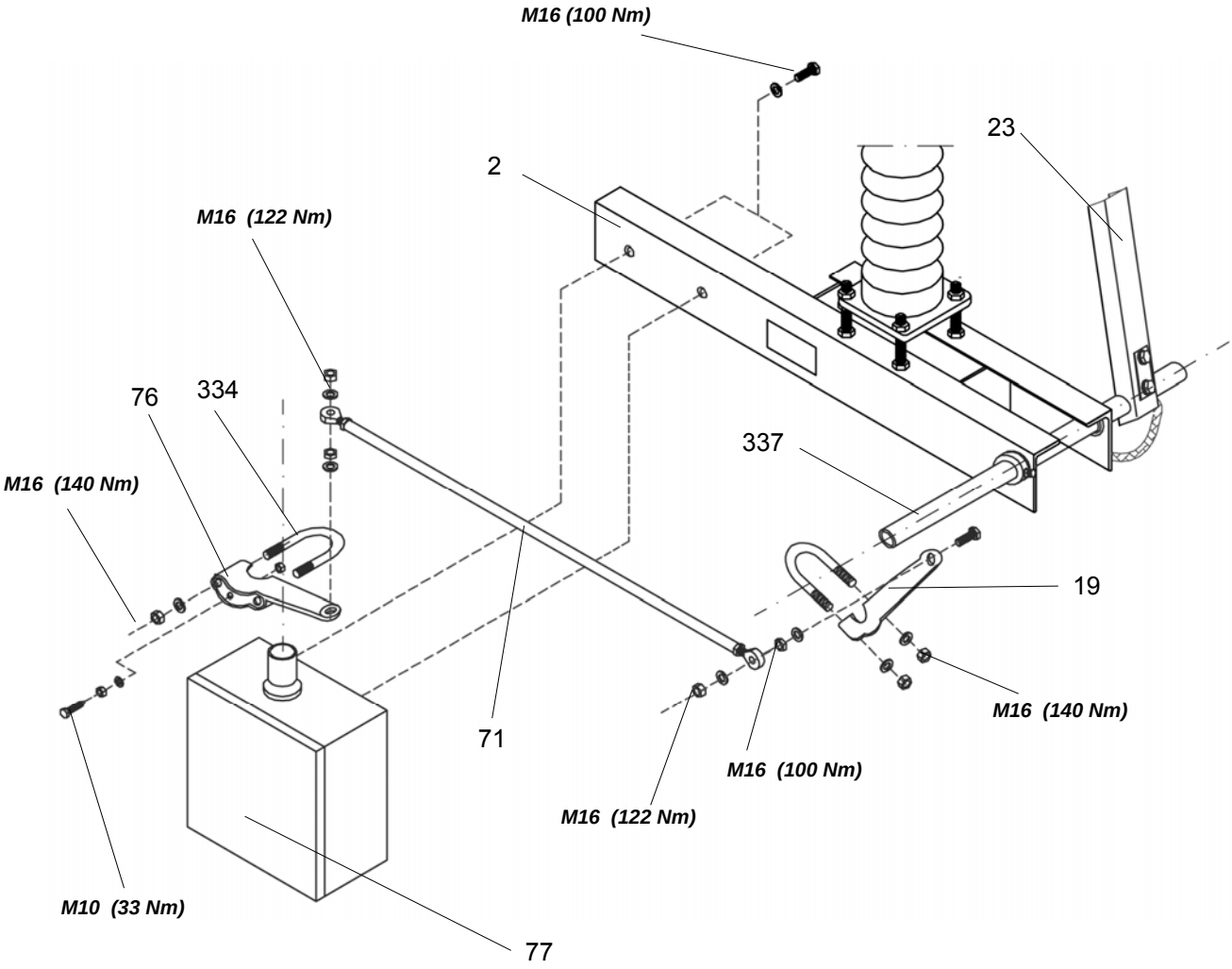

Figure 14: Mounting of operating mechanism for earthing switch: Direct mounting

6.3.2 Separate Mounting

In case of separate mounting of operating mechanism for earthing switch, the mounting of steps are depended on measurement m3 of operating shaft (43) and on a possible offset of operating mechanism and earthing switch

- Separate mounting if measurement m3 < 6m
- Separate mounting if measurement m3 = 6 .. 12m

Make sure that operating mechanism is in the ON position (as-delivered state). If the operating mechanism is in the OFF position, set it to the ON position using the emergency hand crank (39).

If a manual operating mechanism is envisaged for the earthing switch, ensure when mounting that there is sufficient clearance for the operating lever (367) of the operating mechanism

Mounting steps:

1. Unpack operating mechanism (77)
2. Mount pivot bearing (42) on disconnector base (2)
3. If measurement m3 = 6…12 m: Mount additional pivot bearings in the envisaged positions
4. Insert operating shaft (43) through the pivot bearing
5. If measurement m3 = 6…12 m: Insert individual parts of operating shaft (43) through the pivot bearings
6. Vertically align operating mechanism by operating shaft (43)
7. Calculate required length of operating shaft (43) and mount
8. Remove operating shaft again and shorten to suitable length
9. After shortening, coat intersection surface with the zinc paint
10. Grease thrust bearing (330), inside, and collared bush (331), outside, with Mobilgrease28 [Fig. 15]
11. Repeat operating steps 5. and 6., threading thrust bearing (330) and collared bush (331) in correct sequence onto the operating shaft
12. *If measurement m3 = 6…12 m: Connect individual parts of operating shaft to coupling parts (334, 335)*
13. Tighten operating mechanism and pivot bearing
14. Connect shaft end of operating mechanism and operating shaft (43) to coupling parts (334, 335)
15. Mount operating lever (76) on upper end of operating shaft (43) [Fig. 15]

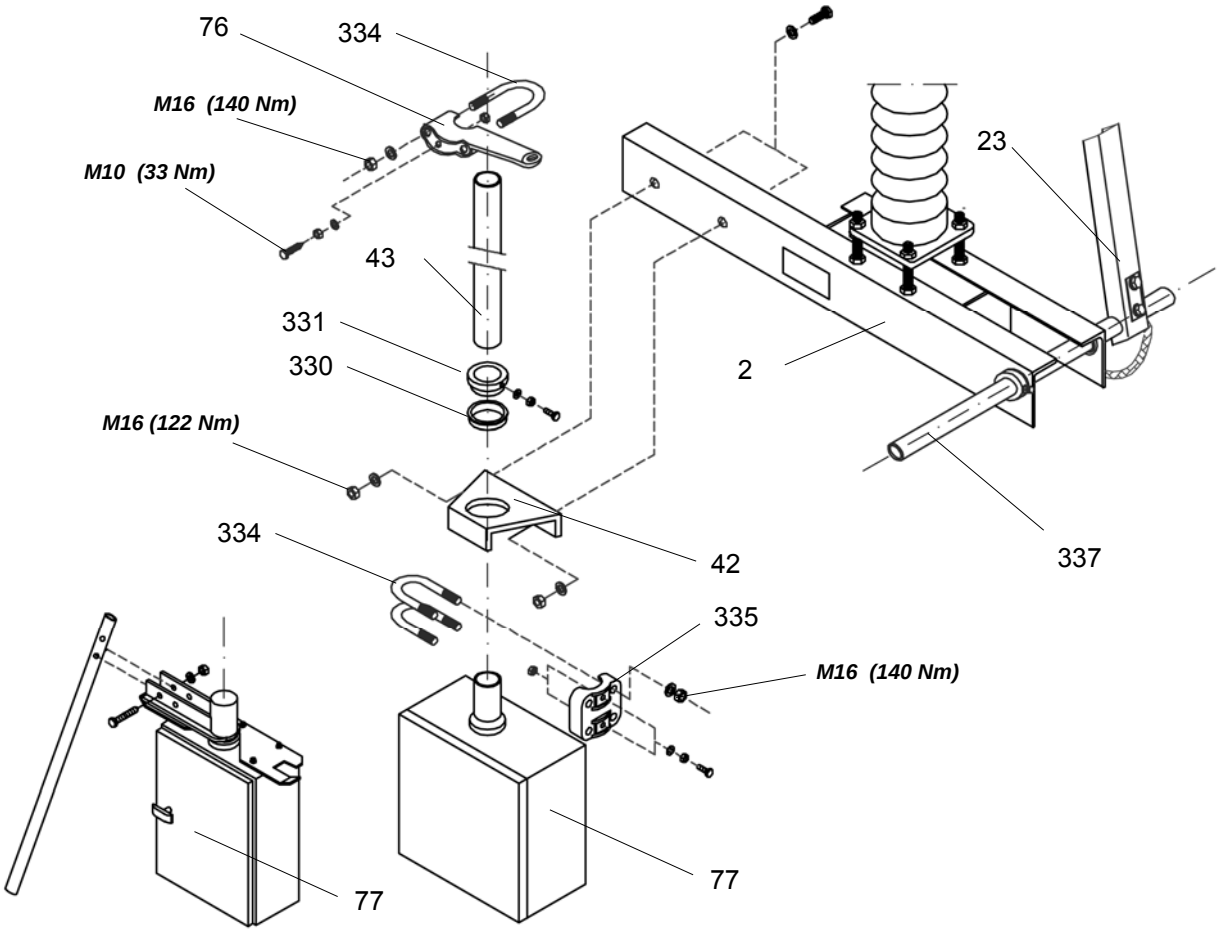

Figure 15: Mounting of operating mechanism for earthing switch, separate mounting

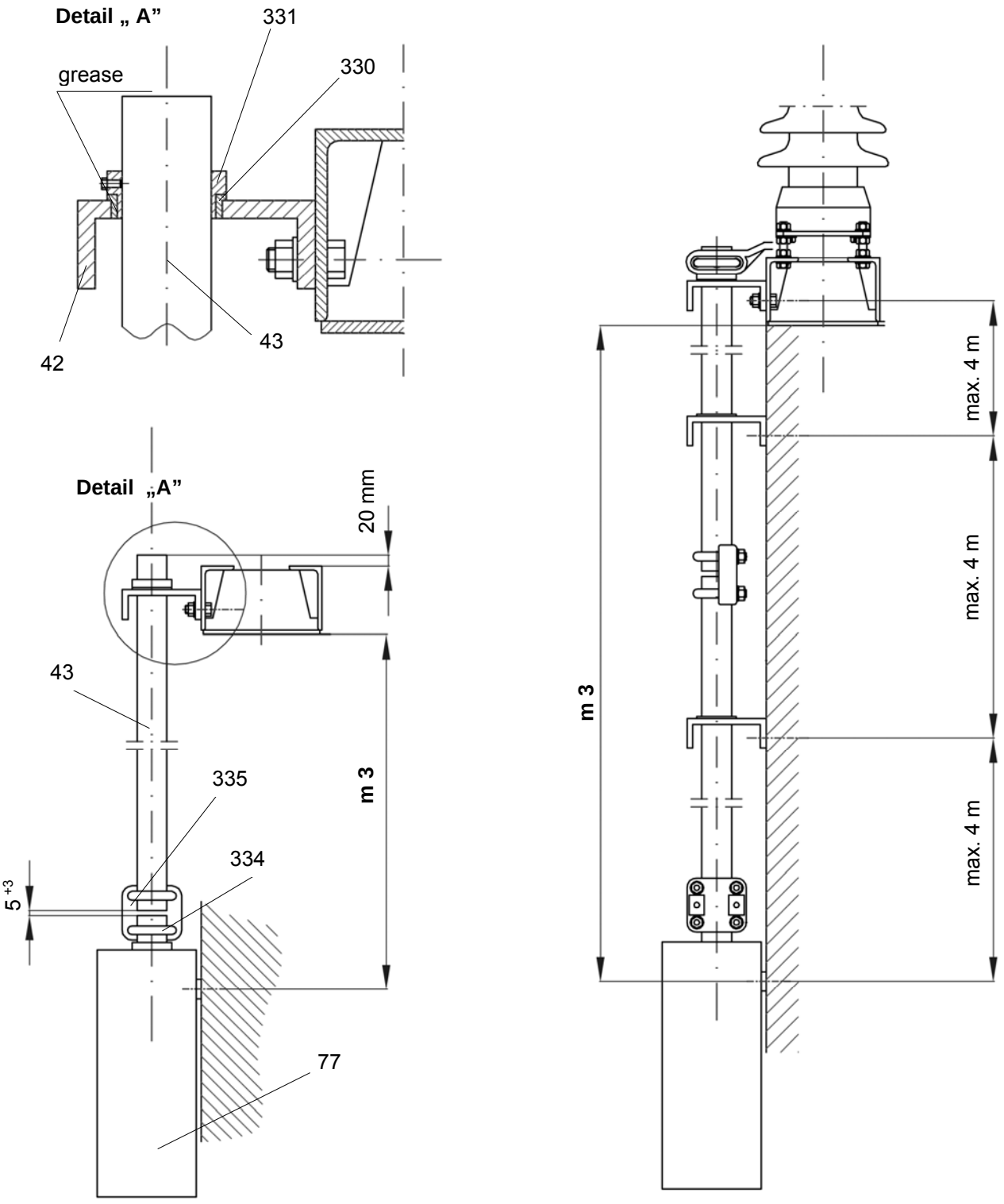

m3 < 6m

6m ≤ **m3** ≤ 12m

Figure 16: Mounting of operating mechanism for earthing switch, separate mounting –dimension m3

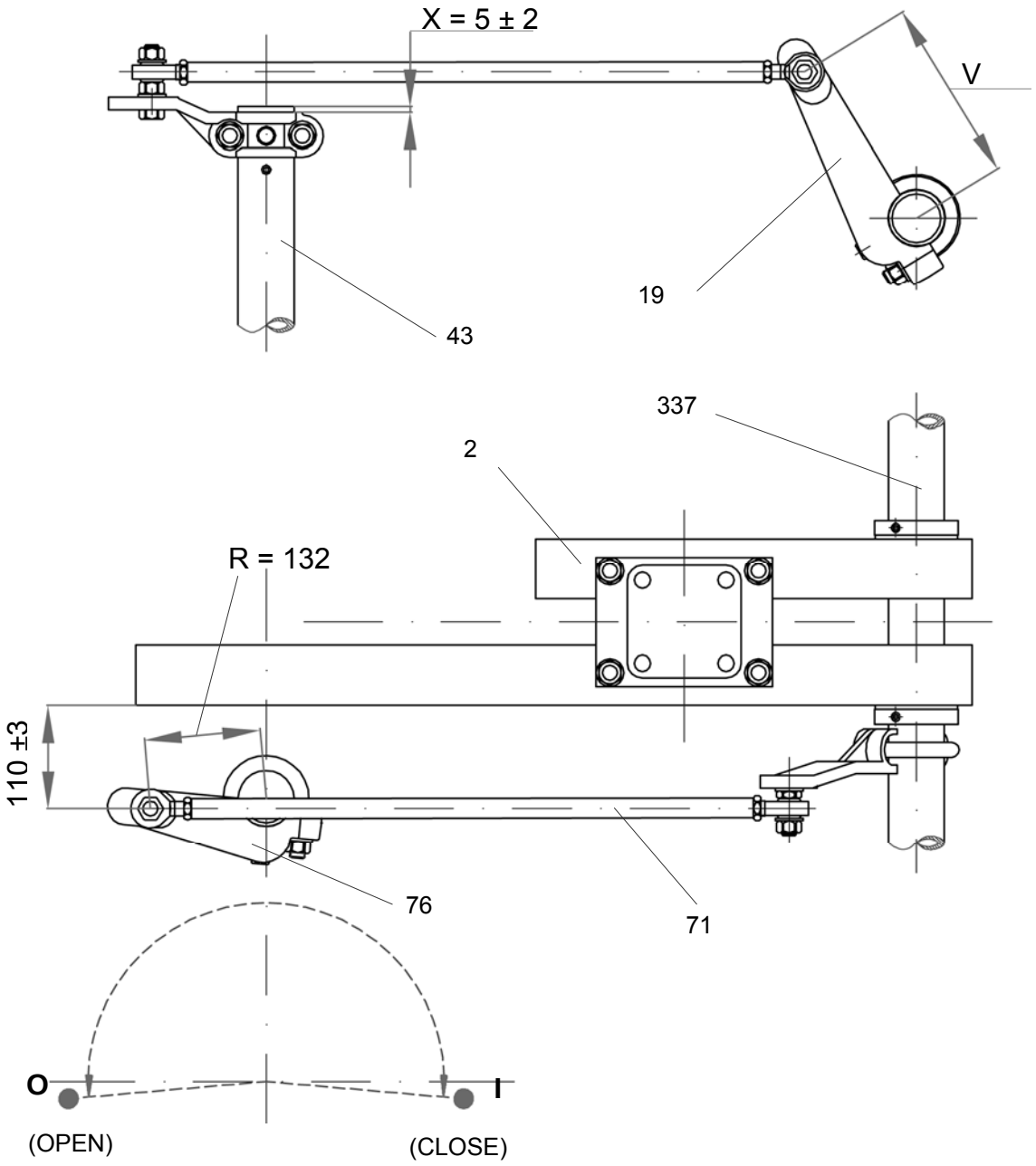

Insulator height mm	**V** mm
1220 … 1700	197
2100 … 2650	192

Figure 17: Adjustment of operating mechanism - earthing switch poles in parallel

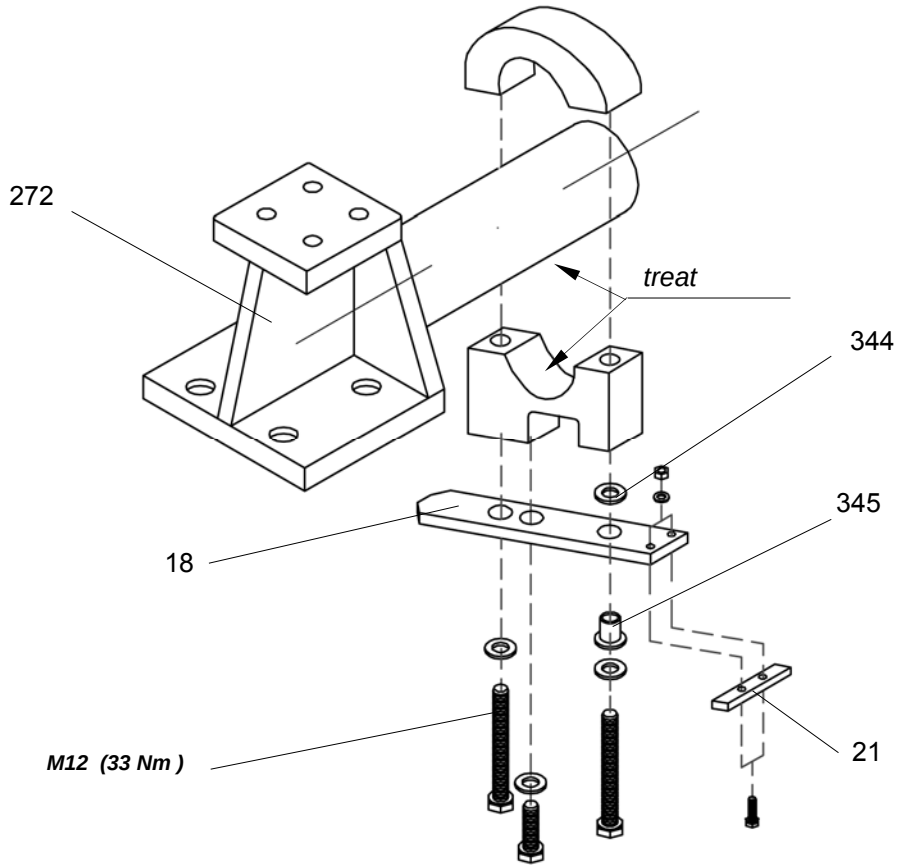

Figure 18: Mounting of earthing contact (18) for rated voltages 72,5 … 170 kV rated peak-withstand currents ≤ 100 kA

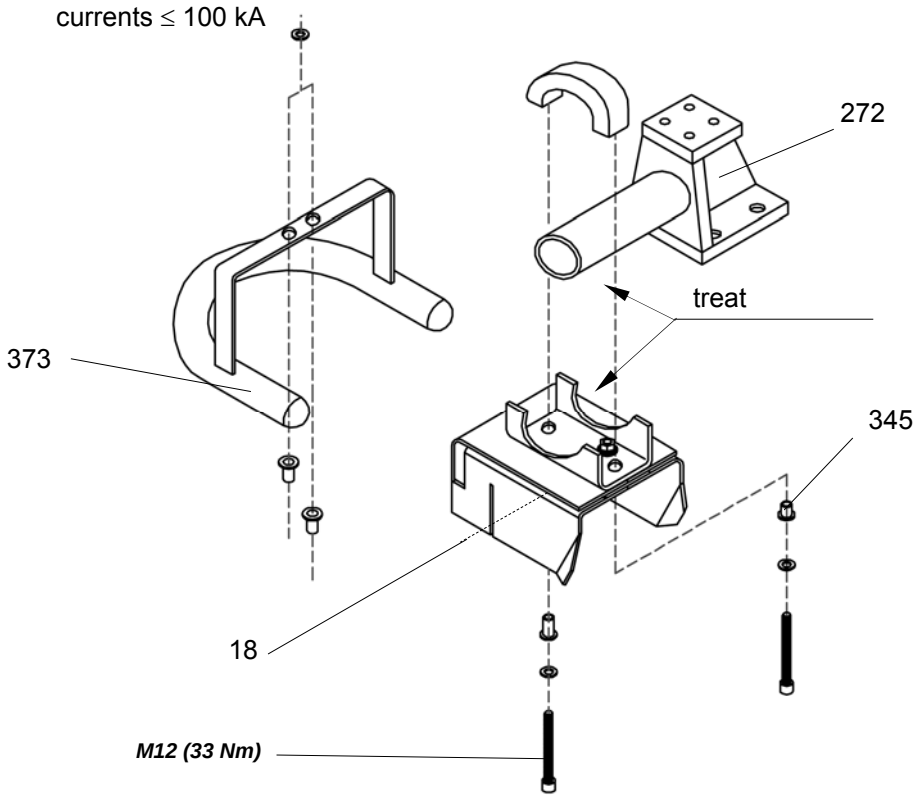

Figure 19: Mounting of earthing contact (18) for rated voltages 245 … 300 kV rated peak-withstand currents ≤ 125 kA
(corona-protection fitting only for rated voltages 245 … 300 kV)

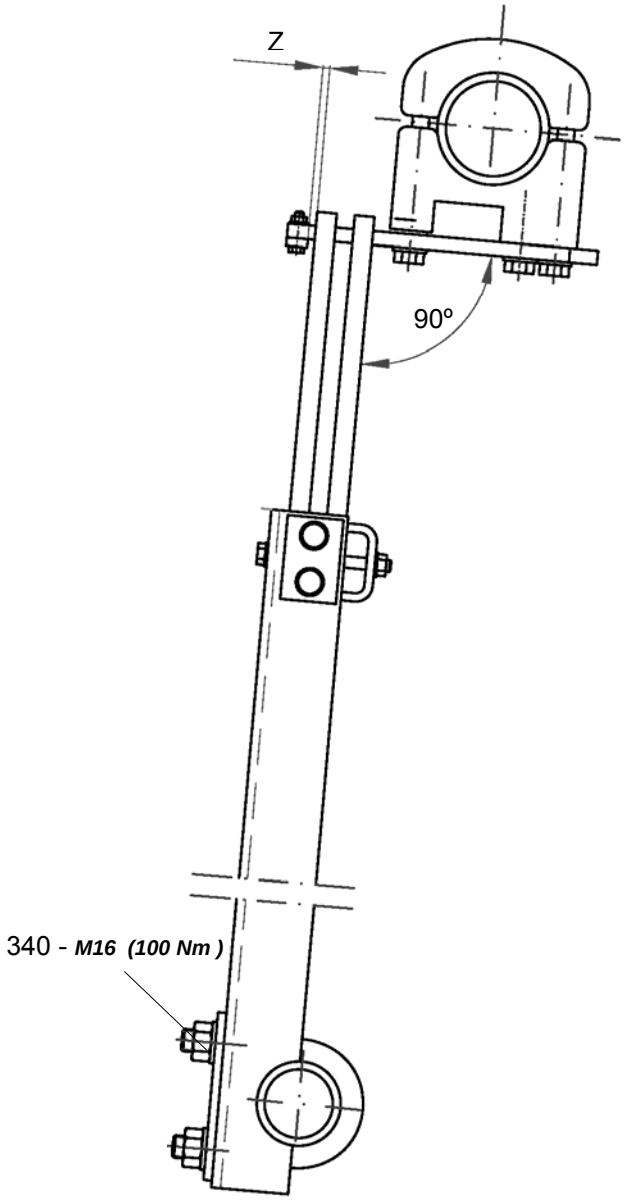

short circuit current ≤100kA
rated voltage 72,5 – 145 kV

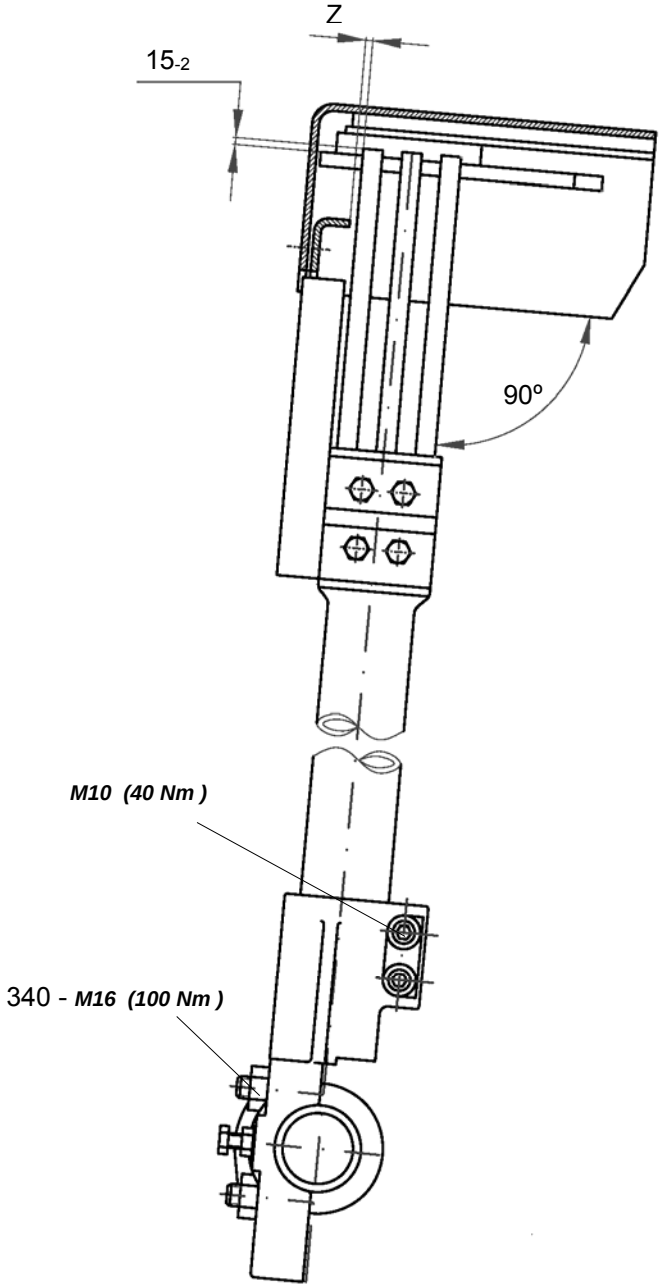

short circuit current ≤125 kA
rated voltage 170 – 300 kV

Pole distance	I (recommended presetting on poles a, b, c during mounting)									I (after mounting)
	2000…2999 mm			3000…3999 mm			4000…4999 mm			
	a mm	b mm	c mm	a mm	b mm	c mm	a mm	b mm	c mm	Z mm
Operated pole: a	20	10	0	30	15	0	40	20	0	max. 5 (on one pole of 3-pole group)
Operated pole: b	0	10	0	0	15	0	0	20	0	
Operated pole: c	0	10	20	0	15	30	0	20	40	

Figure 20: Earthing contact (18), adjusting measurements

7. Commissioning and De-commissioning

7.1 Commissioning of Earthing Switch

Commissioning steps:

1. Carry out a test operation manually, checking that there is symmetrical engagement of contact fingers (20) on earthing contact
2. If necessary, correct symmetrical engagement by loosing and re-tightening nuts (340) on earthing switch clamp

Commissioning of Operating Mechanism for Earthing Switch

Commissioning steps:

1. Check operating mechanism according to the service instruction supplied
2. Check dead-center position of operating rods (37) in the ON and OFF position
3. If necessary, correct dead-center position by adjusting operating lever (76) and / or operating rod (71)
4. Check contact of rear contact fingers against stop (21) of earthing contact (18) [Fig. 20]
5. Remove bag with desiccative from operating mechanism and start electric heating of operating mechanism
6. Make two OPEN -CLOSE operations with electrically controlled operating mechanism

7.2 De-commissioning

The earthing switch type TEC is environmentally friendly product.

If the herein-described switching device is de-commissioning, the materials removed should be reused. The switching device can be disposed of in an environmentally friendly manner on the basin of existing legal regulations.

Recycling is in the form of mixed scarp. The device contains the following materials:

- Steel
- Copper
- Aluminium
- Cast iron
- Synthetics
- Rubber materials in the form of sealing materials
- Ceramics
- Lubricants

There are no hazardous materials within the meaning of the regulations for handling dangerous material.

8. Maintenance

We recommend that the inspection intervals given in Table 8 for normal and extreme ambient conditions be complied with. They are essential to the trouble-free operation of the equipment.

Ambient condition	Inspection intervals
Normal	After every 5 operating years or After every 1000 switching cycles
Extreme	After every 2,5 operating years or After every 500 switching cycles

The examples given below for extreme ambient conditions are based on our experience:

- Climate (tropical, arctic)
- Heavy contamination (dust, salt, rust, sulphur)

The repair operations require the use of following special tools and materials in addition to the standard tools:

- Brass-wire brush for treatment of copper surfaces
- Steel-wire brush for treatment of aluminium surfaces
- Steel-wire brush for treatment of zinc surfaces
- Contact grease Mobilgrease 28 or alternative
- Cold cleaning agent for silver-faced surfaces
- Lint-free cloths

Unless these service instructions specify special values for torques, the standard values given in table shall apply.

Permissible torques for bolts (standard values)

Thread	Torques in Nm		
	Steel, galvanised	Steel, rustproof	Thread in aluminium
Strength	8.8	A2-70, A4-70	-
M6	-	7	5,5
M8	-	16	14
M10	42	33	26
M12	72	56	45
M16	140	122	100
M16	174	(stud-bolts of rotary pedestal)	

8.1 Treatment of contact surfaces and Intersection

Bolted or sliding contact surfaces that conduct current have an effect on the electrical resistance. Dirty or oxidised contact surfaces increase the electrical resistance. This result in irreparable damage to equipment.

Aluminium (bolted)

1. Grease lightly
2. Using a steel-wire brush, remove oxide film until surface is mat grey in appearance (do not use emery paper)
3. Wipe off contaminated grease immediately using a lint-free cloth
4. Grease immediately (approx. 1mm)
5. Bolt together treated surfaces and grease joints

Silver-faced contact surfaces (bolted)

1. Clean with cold cleaning agent (do not destroy silver surface)
2. Grease immediately (approx. 1 mm)
3. Bolt together treated surfaces and grease joints

Copper (bolted)

1. Clean using brass-wire brush
2. Grease immediately (approx. 1 mm)
3. Bolt together treated surfaces and grease joints
   (If copper is bolted to aluminium, place copper-plated aluminium sheet between the surfaces, ensuring that the sheet is the following way round: Cu-Cu, Al.-Al.)

Steel parts (hot dip galvanised steel parts after removal zinc layer by cutting or machining)

If the zinc layer is destroyed of removed, use the zinc paint („cold zinc”). This operation should be done in short time after removing in order to prevent developing of corrosion.

8.2 Operation steps:

The five safety rules:

1. Disconnection
2. Safeguard against reconnection
3. Establish potential isolation
4. Earth and short-circuit
5. Cover or partitions off adjacent, live parts

The following operations must be carried out at each inspection interval.

1. Observe safety rules for work on high-voltage equipment and take suitable measures
2. Switch off electrical power supplies and control voltages and safeguard against reconnection
3. Clean earthing contacts (18) , and contact fingers (20) ;check for erosion in area of silver layer >0,5 mm and, if necessary, replace
4. Grease earthing contacts (18) and contact fingers (20)
5. Check for damage to earthing connections between earthing switch and disconnector base and, if necessary replace
6. Check maintenance-free rod ends and supporting points of all operation linkages and coupling rods
7. Check all bolt connections for security
8. Carry out some test operations manually (our recommendation: Three test operations)
9. Reconnect electrical power supplies and control voltages
10. Carry out some test operations using the motor-operated mechanism (our recommendation: Three test operations)
11. The maintenance of the operating mechanism for the disconnector should be carried out according to the maintenance instructions separately supplied for the operating mechanism

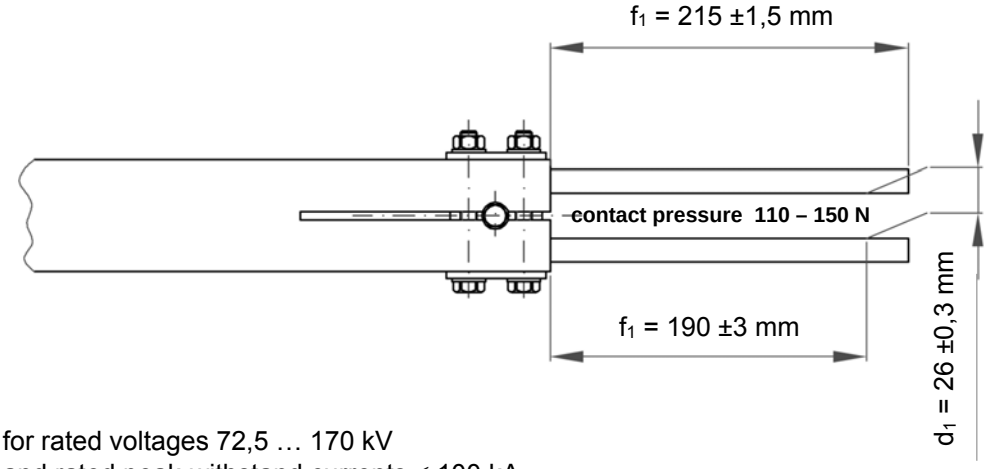

A) for rated voltages 72,5 … 170 kV
and rated peak-withstand currents ≤ 100 kA

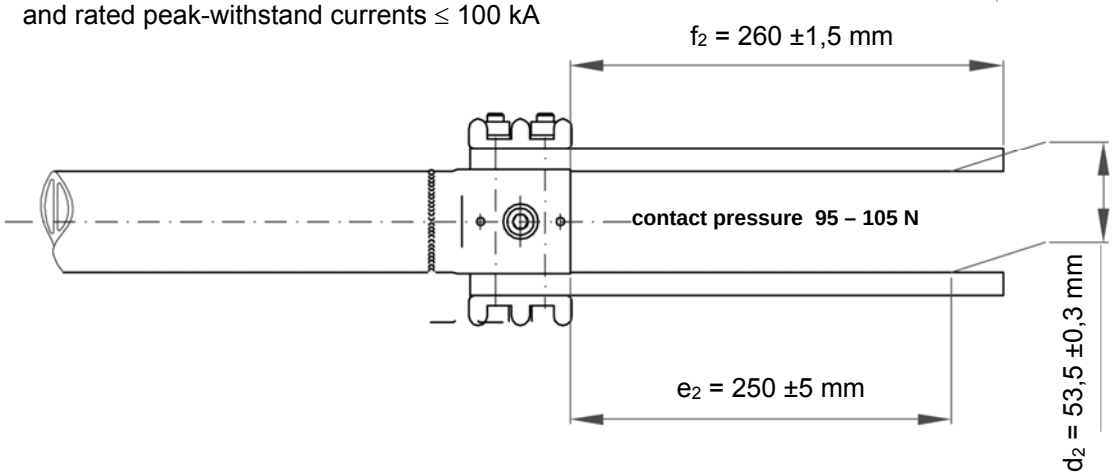

B) for rated voltages 245 … 300 kV
and rated peak-withstand currents ≤ 125 kA

Figure 21: Maintenance of earthing switch: Contact finger dimensions

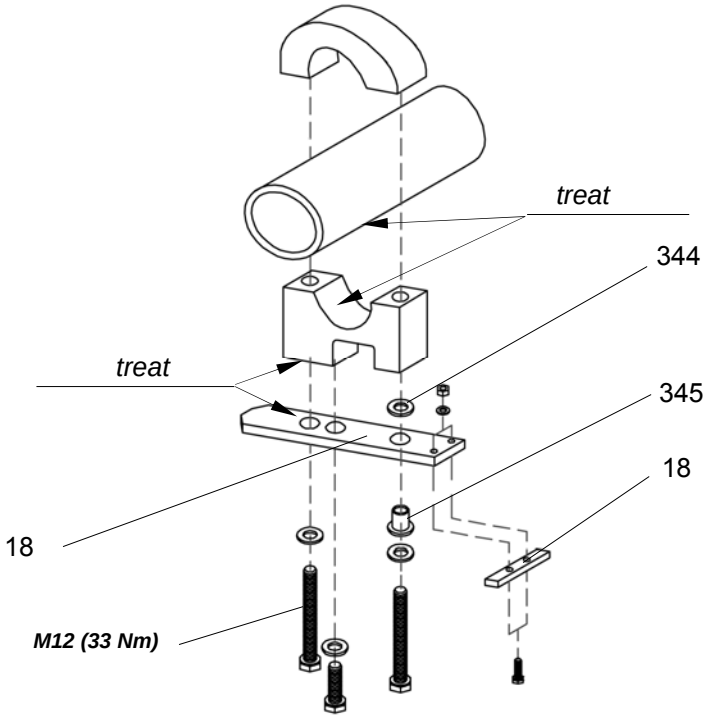

Figure 22: Replacement of earthing contact for rated voltages 72,5 … 170 kV and rated peak-withstand currents ≤ 100 kA

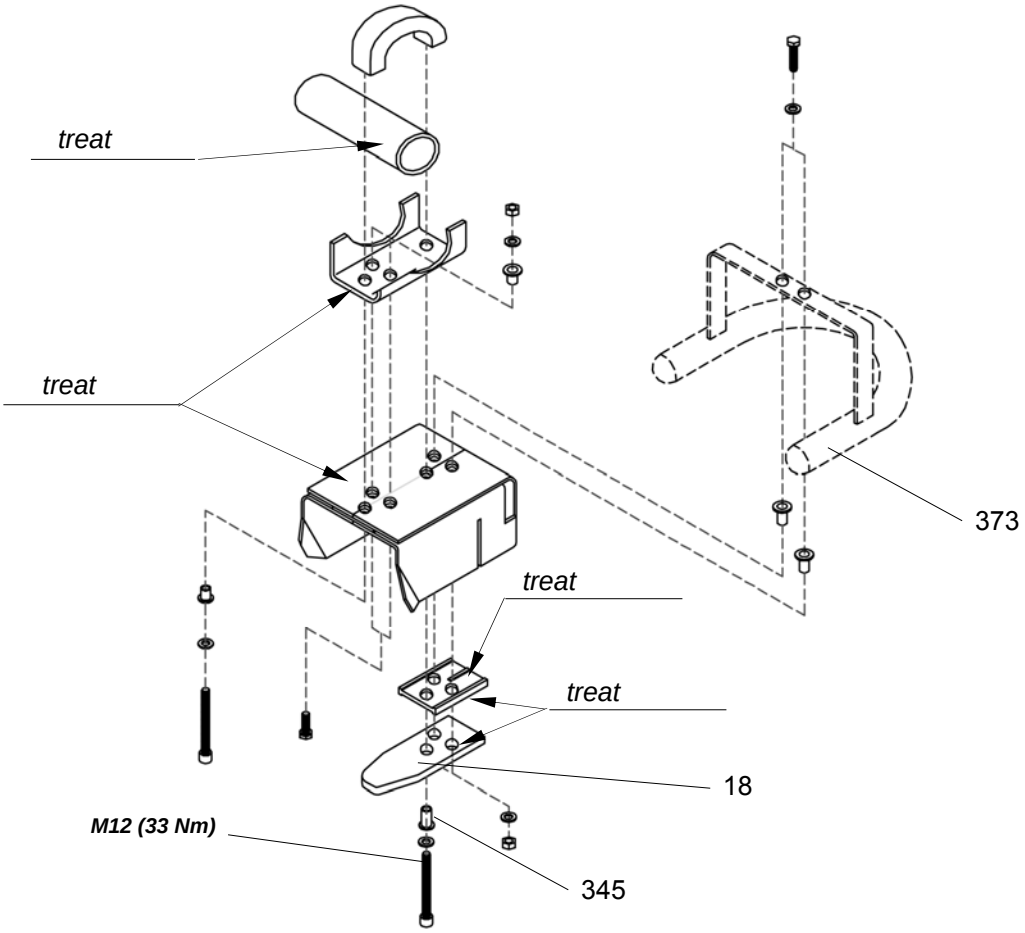

Figure 23: Replacement of earthing contact (18) for rated voltages 245 … 300 kV and rated peak-withstand currents ≤ 125 kA
(corona-protection fitting only for rated voltages 245 … 300 kV)

9. Spare parts

9.1 Order information

We advise you contact to keep a stock of the following spare parts for your version of disconnector, This will enable you, should the need arise, to the re-commissioning your disconnector quickly.

You can order or re-order the spare parts at any time. Please send your order to the address given on cover page.

To ensure the speedy processing of your order, we require the following information from you:

- Type and order number of the disconnector and of the operating mechanism as shown on the rating plate
- Destination of spare part, item number and order number from Table 10 and/or Table11

For your information, the following example explains the designation and the order number.

An example of the type designation on the rating plate of a type TEC earthing switch is TEC 245 / 100. The individual parts of this designation have the following significance:

- TEC Earthing switch type
- 245 Rated voltage in kV
- 100 Rated peak-withstand current in kA

An example of the order number on the rating plate of a type TEC earting switch is 500 130 04c**.** The individual parts of this designation have the following significance:

- 500 130 Internal order number
- 04 Group serial number (01…99)
- c Pole designation (for 3-pole groups: a, b, c)

9.2 List of spare parts

The quantities given in the following tables apply to each pole. For two or more poles, increase the quantity accordingly.

Designation of spare parts	Qty.	Item No.	Order number
Earthing contact			
- 123…170 kV: ≤ 100 kA	1	18	GPDT 06 4000 R0300
- 123…300 kV: ≤ 125 kA	1	18	GPDT 06 4000 R0310
Contact finger			
- 123…170 kV: ≤ 100 kA	4	20	GPDT 06 1028 R0010
- 123…300 kV: ≤ 125 kA	6	20	GPDT 06 1028 R0021
Earthing connection			
≤ 40 kA, 1 s	1	79	GPDT 06 4019 P0001
≤ 40 kA, 3 s; ≤ 50 kA, 1- 3 s	1	343	GPDT 06 4019 P0002
Contact grease Mobilgrease 28			
-450 g box	-	580	ZPL 024 3001 P0020

10. Lists of Item Numbers

No.	Description	Remarks
2	Base frame of earthing switch	pole with operating mechanism
2a	Base frame of earthing switch	pole without operating mechanism (parallel arrangement)
2b	Base frame of earthing switch	pole without operating mechanism (in series arrangement or individual pole mounting)
15	Coupling rod	arrangement in series
18	Earthing contact	
19	Lever	
20	Contact finger	
21	Stop	
23	Earthing switch arm	
43	Operating shaft	separate mounting (operating mechanism below the base frame)
71	Operating rod	
73	Coupling shaft	arrangement in series
76	Operating lever	mounted on mechanism end or operating shaft (43)
77	Operating mechanism	motor or hand operated
79	Earthing connection	
201	Post insulator	

List of figures:

Figure 1: 3-pole type TEC earthing switch in parallel arrangement (basic design) 4
Figure 2: 3-pole type TEC earthing switch in series arrangement (basic design) 4
Figure 3: General main dimensions of type TEC earthing switch (standard values) 6
Figure 4: Earthing switch type TEC 7
Figure 5: Mounting of post insulator and contact support 11
Figure 6: Mounting of post insulator and contact support 12
Figure 7: Mounting of earthing switch in parallel arrangement 12
Figure 8: Mounting of earthing switch in parallel arrangement if earthing switch is delivered as complete poles 13
Figure 9: Mounting of coupling piece (342, 334) for connection of earthing-switch shafts (337) 13
Figure 10: Mounting of support (360) for contact arm (23) 14
Figure 11: Mounting of earthing switch –poles in series –dimensions 16
Figure 12: Mounting of earthing switch –poles in series- mounting of coupling rods 17
Figure 13: Mounting of earthing connections 18
Figure 14: Mounting of operating mechanism for earthing switch: Direct mounting 19
Figure 15: Mounting of operating mechanism for earthing switch, separate mounting 21
Figure 16: Mounting of operating mechanism for earthing switch, separate mounting –dimension m3 . 22
Figure 17: Adjustment of operating mechanism - earthing switch poles in parallel 23
Figure 18: Mounting of earthing contact (18) for rated voltages 72,5 … 170 kV rated peak-withstand currents ≤ 100 kA 24
Figure 19: Mounting of earthing contact (18) for rated voltages 245 … 300 kV rated peak-withstand currents ≤ 125 kA 24
Figure 20: Earthing contact (18), adjusting measurements 25
Figure 22: Replacement of earthing contact for rated voltages 72,5 … 170 kV 31
Figure 23: Replacement of earthing contact (18) for rated voltages 245 … 300 kV 31

HAPAM Poland Sp. z o.o.
22/24 W. Tymienieckiego
90-346 Łódź, POLAND
Tel. +48 42 663 54 50
Fax. +48 42 663 54 97
www.hapam.pl; e-mail: hapam@hapam.pl